KÄRCHER

makes a difference

High Pressure Cleaner

Cold Water

English 2

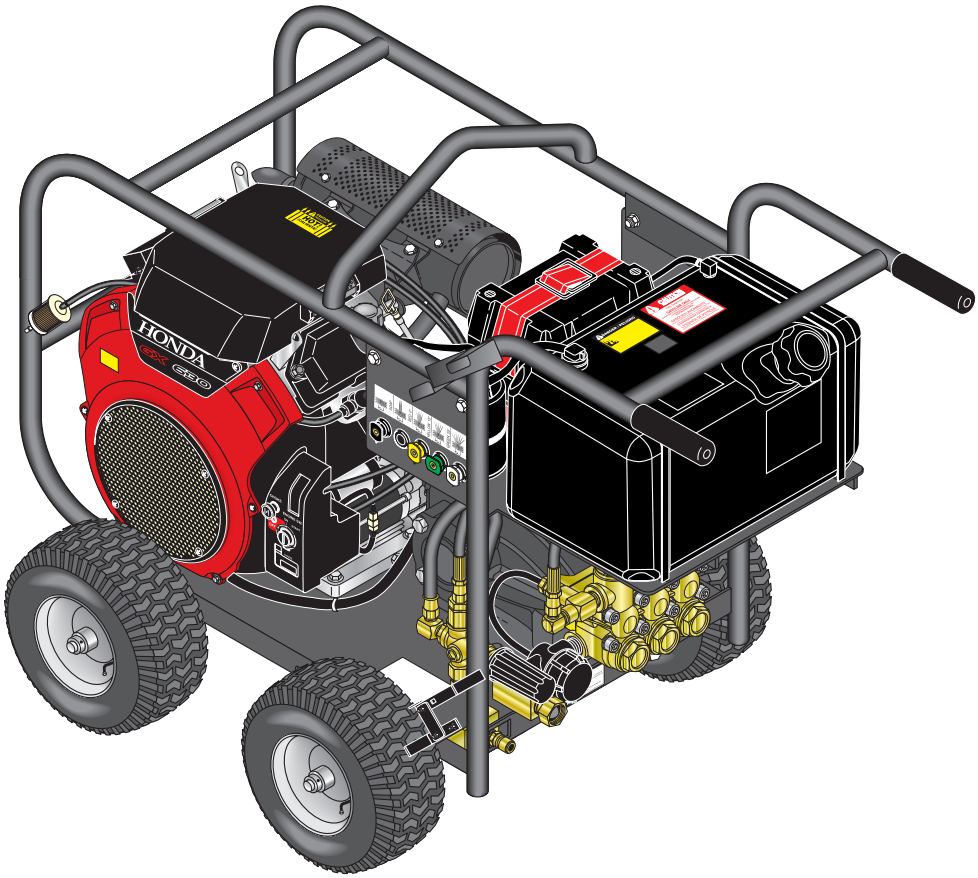

Register your product
www.kaercher.com/welcome

98076240-E (11/25)

MODELS:

1.575-200.0
HD 4.0/50 Pb Cage

1.575-201.0
HD 4.5/50 Pb Cage

1.575-205.0
HD 3.7/35 Pb Cage

1.107-454.0
HD 4.0/50 PeB Cage K

1.107-455.0
HD 4.5/50 PeB Cage K

CONTENTS

Introduction & Important Safety Information 2
Component Identification — Single Axle Models 4
Component Identification — Dual Axle Models 5
Assembly Instructions 6
Operating Instructions 7
Applying Detergent & General Cleaning Techniques 9
Shutting Down And Clean-Up 10
Troubleshooting 11
Preventative Maintenance 13
Oil Change Record 13
Specifications 14
Hose & Spray Gun Assembly and Parts List 15

Model Number _____

Serial Number _____

Date of Purchase _____

The model and serial numbers will be found on a decal attached to the pressure washer. You should record both serial number and date of purchase and keep in a safe place for future reference.

INTRODUCTION & IMPORTANT SAFETY INFORMATION

Thank you for purchasing this Pressure Washer. We reserve the right to make changes at any time without incurring any obligation.

Owner/User Responsibility:

The owner and/or user must have an understanding of the manufacturer's operating instructions and warnings before using this pressure washer. Warning information should be emphasized and understood. If the operator is not fluent in English, the manufacturer's instructions and warnings shall be read to and discussed with the operator in the operator's native language by the purchaser/owner, making sure that the operator comprehends its contents.

Owner and/or user must study and maintain for future reference the manufacturers' instructions.

The operator must know how to stop the machine quickly and understand the operation of all controls. Never permit anyone to operate the engine without proper instructions.

SAVE THESE INSTRUCTIONS

This manual should be considered a permanent part of the machine and should remain with it if machine is resold.

When ordering parts, please specify model and serial number. Use only identical replacement parts.

This machine is to be used only by trained operators.

IMPORTANT SAFETY INFORMATION

WARNING: To reduce the risk of injury, read operating instructions carefully before using.

1. Read the owner's manual thoroughly. Failure to follow instructions could cause malfunction of the machine and result in death, serious bodily injury and/or property damage.
2. Know how to stop the machine and bleed pressure quickly. Be thoroughly familiar with the controls.
3. Stay alert — watch what you are doing.
4. All installations must comply with local codes. Contact your electrician, plumber, utility company or the selling distributor for specific details.

WARNING: Risk of asphyxiation. Use this product only in a well ventilated area.

5. Avoid installing machines in small areas or near exhaust fans. Exhaust contains poisonous carbon monoxide gas; exposure may cause loss of consciousness and may lead to death. It also contains chemicals known, in certain quantities, to cause cancer, birth defects or other reproductive harm.

WARNING: Risk of fire. Do not add fuel when the product is operating.

WARNING: Risk of explosion — do not spray flammable liquids.

6. Do not place machine near flammable objects as the engine is hot.

WARNING: This product contains chemicals known to the state of California to cause cancer and birth defects or other reproductive harm. Operation of this equipment may create sparks that can start fires around dry vegetation. A spark arrestor may be required. The operator should contact: Local fire agencies for laws or regulations relating to fire prevention requirements.

7. Allow engine to cool for 1-2 minutes before refueling. If any fuel is spilled, make sure the area is dry before testing the spark plug or starting the engine. (Fire and/or explosion may occur if this is not done.)

Gasoline engines on mobile or portable equipment shall be refueled:

a. outdoors;
b. with the engine on the equipment stopped;
c. with no source of ignition within 10 feet of the dispensing point; and
d. with an allowance made for expansion of the fuel should the equipment be exposed to a higher ambient temperature

In an overfilling situation, additional precautions are necessary to ensure that the situation is handled in a safe manner.

WARNING: Risk of injury. Disconnect battery ground terminal before servicing.

8. Transport/repair with fuel tank EMPTY or with fuel shut-off valve OFF.

IMPORTANT SAFETY INFORMATION

WARNING: Keep wand, hose, and water spray away from electric wiring or fatal electric shock may result.

9. Do not spray water on or near electrical components.

WARNING: Flammable liquids can create fumes which can ignite, causing property damage or severe injury.

WARNING: Risk of explosion — Do not spray flammable liquids.

10. Keep operating area clear of all persons.

WARNING: This machine exceeds 85 db appropriate ear protection must be worn.

WARNING: High pressure spray can cause paint chips or other particles to become airborne and fly at high speeds. To avoid personal injury, eye, hand and foot safety devices must be worn.

11. Eye, hand, and foot protection must be worn when using this equipment.

WARNING: Grip cleaning wand securely with both hands before starting. Failure to do this could result in injury from a whipping wand.

12. To reduce the risk of injury, close supervision is necessary when a machine is used near children. Do not allow children to operate the pressure washer. **This machine must be attended during operation.**

WARNING: High pressure developed by these machines will cause personal injury or equipment damage. Keep clear of nozzle. Use caution when operating. Do not direct discharge stream at people, or severe injury or death will result.

13. Never make adjustments on machine while in operation.
14. Be certain all quick coupler fittings are secured before using pressure washer.

WARNING: Protect machine from freezing.

15. To keep machine in best operating conditions, it is important you protect machine from freezing. Failure to protect machine from freezing could cause malfunction of the machine and result in death, serious bodily injury, and/or property damage. Follow storage instructions specified in this manual.
16. The best insurance against an accident is precaution and knowledge of the machine.

WARNING: Be extremely careful when using a ladder, scaffolding or any other relatively unstable location. The cleaning area should have adequate slopes and drainage to reduce the possibility of a fall due to slippery surfaces.

17. Do not overreach or stand on unstable support. Keep good footing and balance at all times.
18. Do not operate this machine when fatigued or under the influence of alcohol, prescription medications, or drugs.
19. Inlet water must be clean fresh water and no hotter then 90°F.
20. Manufacturer will not be liable for any changes made to our standard machines or any components not purchased from us.
21. Do not allow acids, caustic or abrasive fluids to pass through the pump.
22. Never run pump dry or leave spray gun closed longer than 1-2 minutes.

Follow the maintenance instructions specified in the manual.

COMPONENT IDENTIFICATION — SINGLE AXLE MODELS

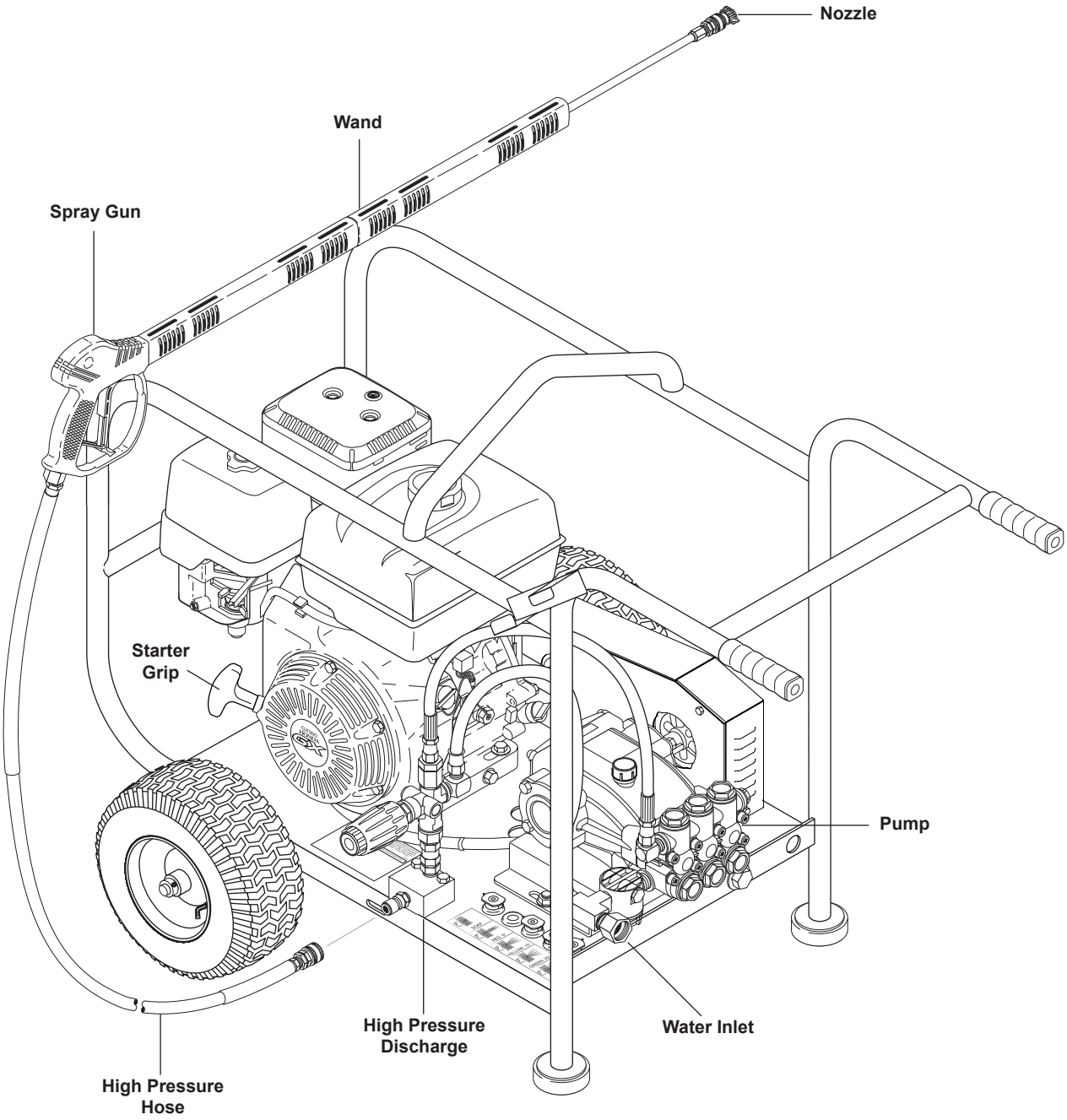

Pump — Develops high pressure.

Starter Grip— Used for starting the engine manually.

Spray Gun — Controls the application of water and detergent onto cleaning surface with trigger device. Includes safety latch.

Detergent Injector — Allows you to siphon and mix detergents (not shown).

Wand — Must be connected to the spray gun.

High Pressure Hose — Connect one end to water pump discharge nipple and the other end to spray gun.

Note: **If trigger on spray gun is released for more than 2 minutes, water will leak from valve. Warm water will discharge from pump protector onto floor. This system prevents internal pump damage.**

COMPONENT IDENTIFICATION — DUAL AXLE MODELS

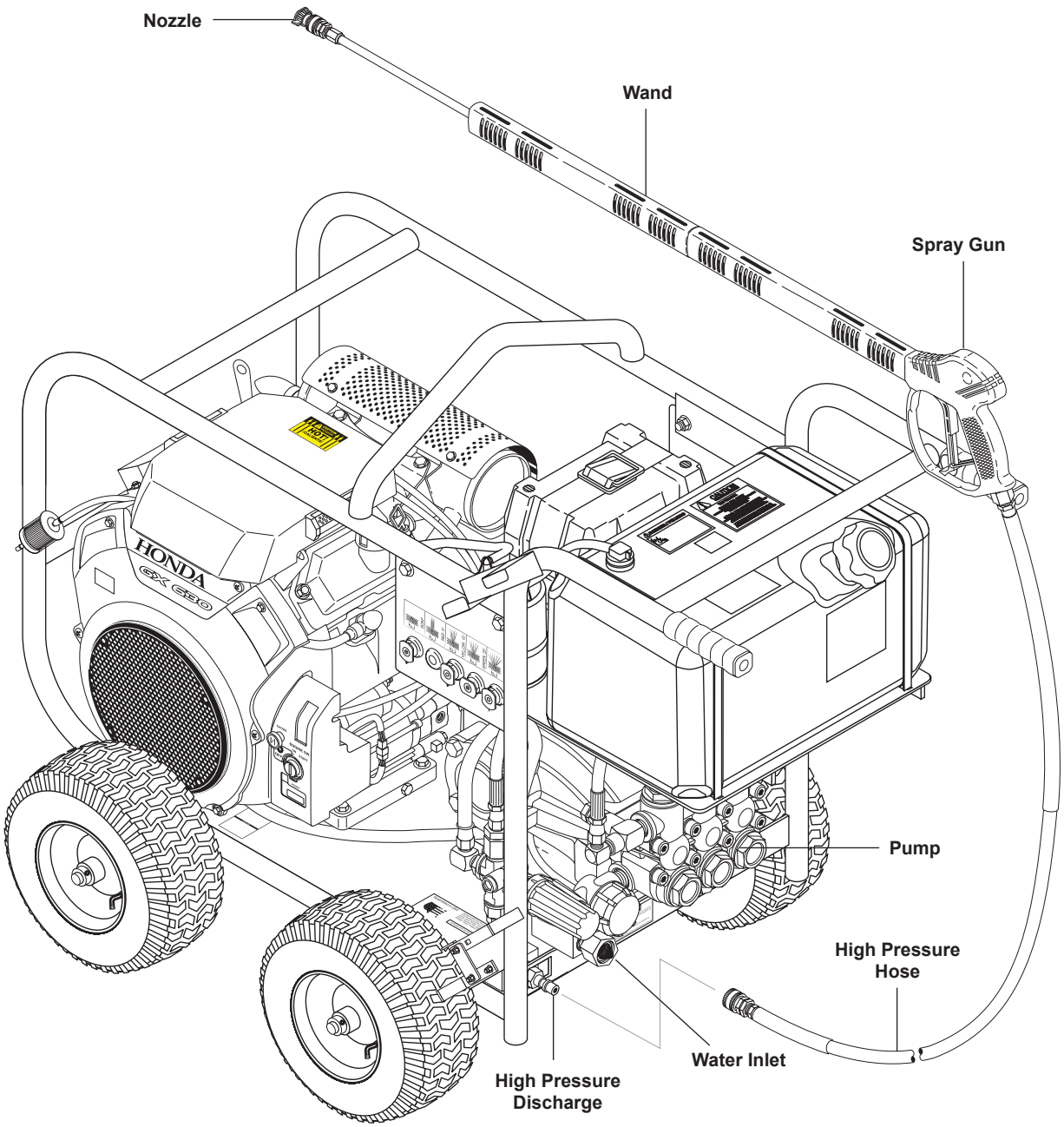

Pump — Develops high pressure.

Spray Gun — Controls the application of water and detergent onto cleaning surface with trigger device. Includes safety latch.

Detergent Injector — Allows you to siphon and mix detergents (not shown).

Wand — Must be connected to the spray gun.

High Pressure Hose — Connect one end to water pump discharge nipple and the other end to spray gun.

Note: **If trigger on spray gun is released for more than 2 minutes, water will leak from valve. Warm water will discharge from pump protector onto floor. This system prevents internal pump damage.**

ASSEMBLY INSTRUCTIONS

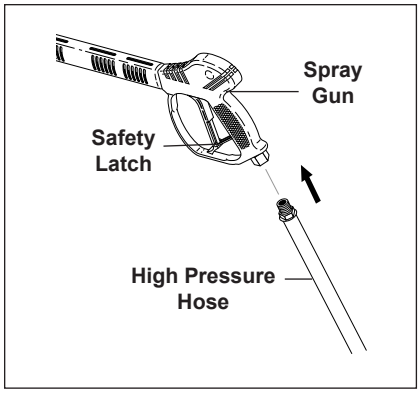

STEP 1: Attach the high pressure hose to the spray gun using teflon tape on hose threads.

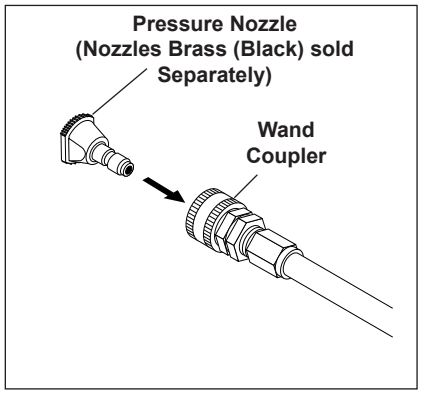

STEP 2: Pull the spring-loaded collar of the wand coupler back to insert your choice of pressure nozzle.

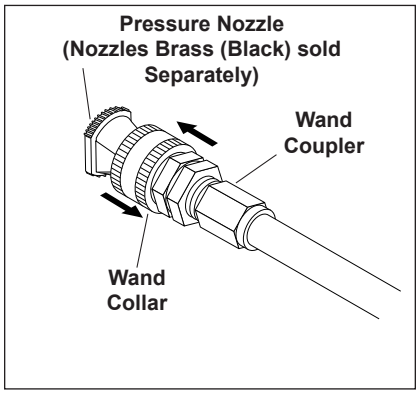

STEP 3: Release the coupler collar and push the nozzle until the collar clicks. Pull the nozzle to make sure it is seated properly.

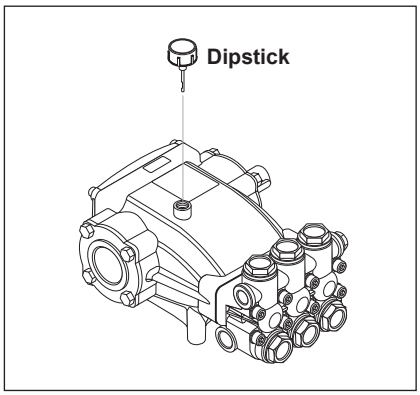

STEP 4: Remove shipping cap and install oil dipstick. Check pump oil level by using dipstick or observe oil level in oil window (if equipped). Use 20/40W non detergent oil.

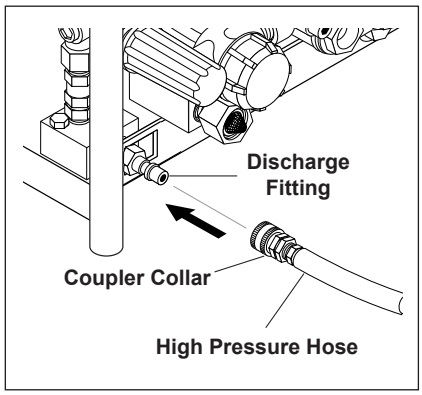

STEP 5: Connect the high pressure hose to the pump discharge fitting. Push coupler collar forward until secure.

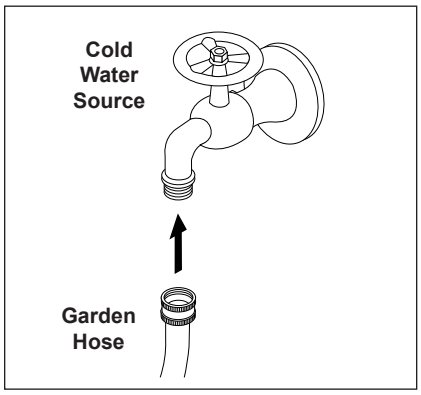

STEP 6: Connect garden hose to the cold water source.

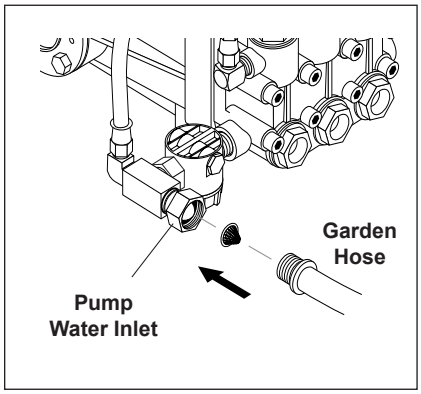

STEP 7: Check inlet filters, remove debris, then connect garden hose to pump water inlet.

CAUTION: Do not run the pump without water or pump damage will result.

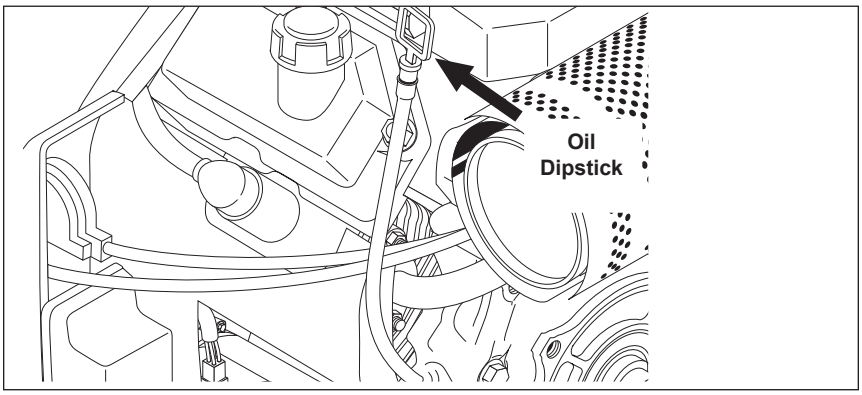

STEP 1: Check engine oil level. Oil level should be level with the bottom of the oil filler neck. Be sure the machine is level when checking the oil level. (Refer to the engine's operating manual included with machine.) We recommend that the oil be changed after the first 5 hours of use, then once every 50 hours. **Note:** Improper oil levels will cause low oil sensor to shut off engine. **IMPORTANT! Do not run engine with high or low oil levels as this will cause engine damage.**

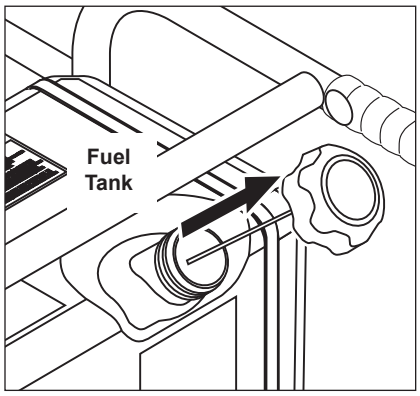

STEP 2: Fill the fuel tank with the appropriate fuel (unleaded gasoline or diesel as noted on the tank). Do not use leaded gasoline.

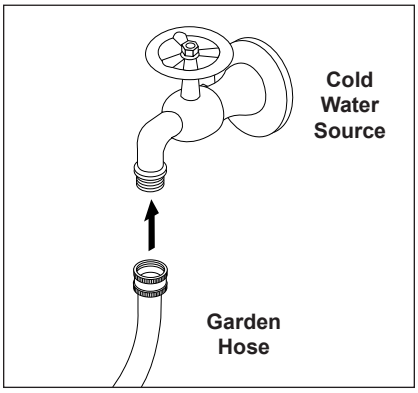

STEP 3: Connect garden hose to the cold water source and turn water on completely. Never use hot water.

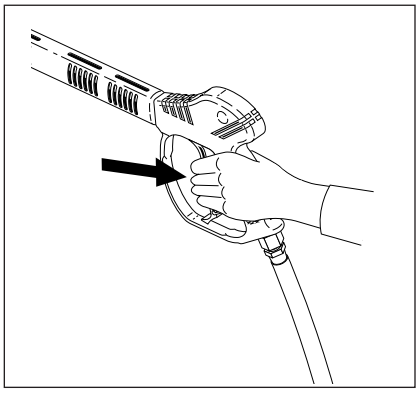

STEP 4: Trigger the spray gun to eliminate trapped air then wait for a steady flow of water to emerge from the spray nozzle.

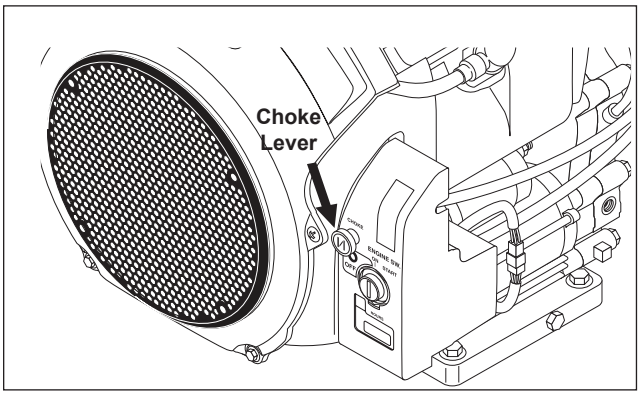

STEP 5: Pull the choke lever out to the "Choke" position (on a warm engine, leave the choke lever in, in the run position). Push the choke lever to the "Closed" position. To restart a warm engine, leave the choke lever in the "Open" position.

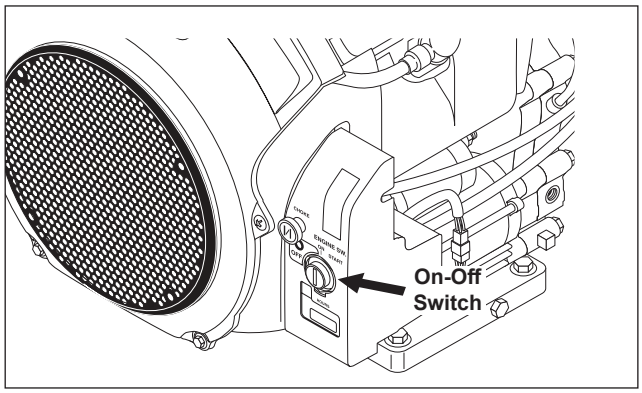

STEP 6: Turn the engine switch to "ON" position.

NOZZLES

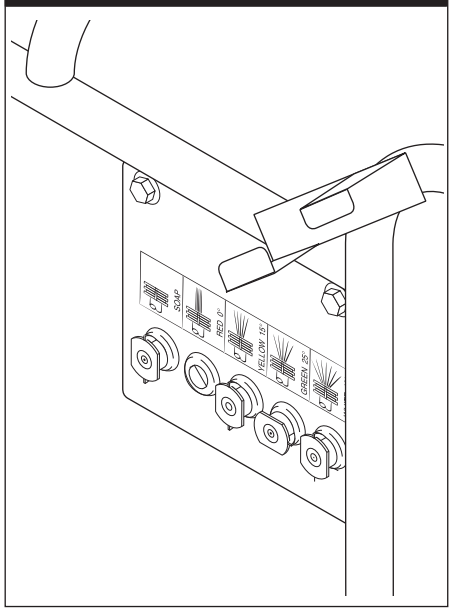

The four color-coded quick connect nozzles provide a wide array of spray widths from 15° to 40° and are easily accessible when placed in the convenient rubber nozzle holder, which is provided on the front of the machine.

NOTE: For a more gentle rinse, select the white 40° or green 25° nozzle. To scour the surface, select the yellow 15° nozzle. To apply detergent select the black nozzle.

*Nozzles Brass (Black) sold separately.

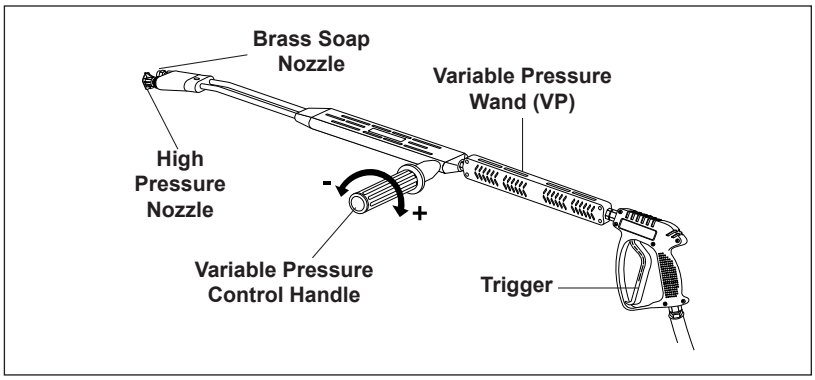

Selection of high or low pressure is accompanied by turning the handle. **Note:** High pressure nozzle must be inserted at end of wand to obtain high pressure. To apply soap read operator's manual.

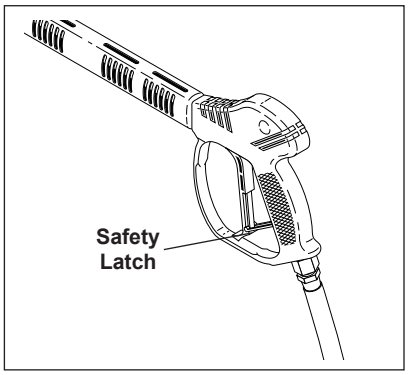

WARNING! Never replace nozzles without engaging the safety latch on the spray gun trigger.

APPLYING DETERGENT & GENERAL CLEANING TECHNIQUES

WARNING: Some detergents may be harmful if inhaled or ingested, causing severe nausea, fainting or poisoning. The harmful elements may cause property damage or severe injury.

STEP 1: Connect detergent injector t discharge nipple on machine. Connect high pressure hose to injector with quick coupler. (Check to make sure locking coupler sleeves are in proper position before applying water pressure).

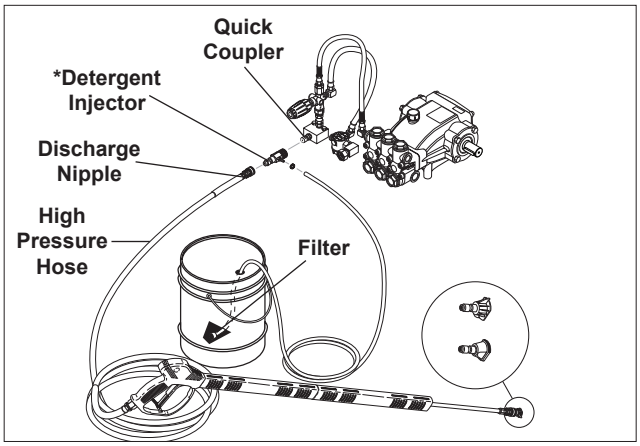

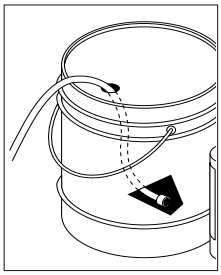

STEP 2: Use detergent designed specifically for pressure washers. Household detergents could damage the pump. Prepare detergent solution as required by the manufacturer. Fill a container with pressure washer detergent. Place the filter end of detergent suction tube into the detergent container.

STEP 3: With safety latch on spray gun engaged, secure black detergent nozzle into quick coupler. **NOTE:** Detergent cannot be applied using yellow, green or white nozzles.

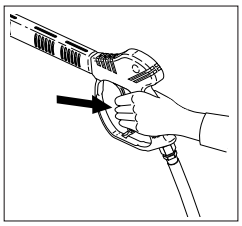

STEP 4: With the engine running, pull trigger to operate machine. Liquid detergent is drawn into the machine and mixed with water. Apply detergent to work area. Do not allow detergent to dry on surface.

IMPORTANT: You must flush the detergent injection system after each use by placing the suction tubeinto a bucket of clean water, then run the pressure washer in low pressure for 1-2 minutes.

****Kit Injector sold separately.***

THERMAL PUMP PROTECTION

If you run the engine on your pressure washer for 3-5 minutes without pressing the trigger on the spray gun, circulating water in the pump can reach high temperatures. When the water reaches this temperature, the pump protector engages and cools the pump by discharging the warm water onto the ground. This thermal device prevents internal damage to the pump.

CLEANING TIPS

Pre-rinse cleaning surface with fresh water. Place detergent suction tube directly into cleaning solution and apply to surface at low pressure (for best results, limit your work area to sections approximately 6 feet square and always apply detergent from bottom to top). Allow detergent to remain on surface 1-3 minutes. Do not allow detergent to dry on surface. If surface appears to be drying, simply wet down surface with fresh water. If needed, use brush to remove stubborn dirt. Rinse at high pressure from top to bottom in an even sweeping motion keeping the spray nozzle approximately 1 foot from cleaning surface. Use overlapping strokes as you clean and rinse any surface. For best surface cleaning action spray at a slight angle.

Recommendations:

- Before cleaning any surface, an inconspicuous area should be cleaned to test spray pattern and distance for maximum cleaning results.
- If painted surfaces are peeling or chipping, use extreme caution as pressure washer may remove the loose paint from the surface.
- Keep the spray nozzle a safe distance from the surface you plan to clean. High pressure wash a small area, then check the surface for damage. If no damage is found, continue to pressure washing.

CAUTION - Never use:

- Bleach, chlorine and other corrosive chemicals
- Liquids containing solvents (i.e., paint thinner, gasoline, oils)
- Tri-sodium phosphate products
- Ammonia products
- Acid-based products

These chemicals will harm the machine and will damage the surface being cleaned.

RINSING

It will take a few seconds for the detergent to clear. Apply safety latch to spray gun. Remove black soap nozzle from the quick coupler. Select and install the desired high pressure nozzle. **NOTE:** You can also stop detergent from flowing by simply removing detergent siphon tube from bottle.

SHUTTING DOWN AND CLEAN-UP

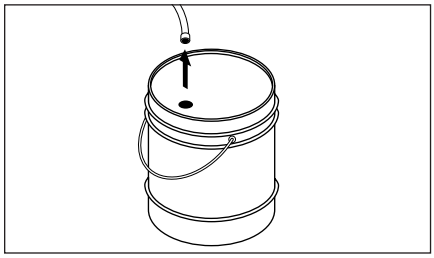

STEP 1: Remove detergent suction tube from container and insert into one gallon of fresh water. Slide nozzle forward for low pressure or to connect black detergent nozzle. Pull trigger on spray gun and siphon water for one minute.

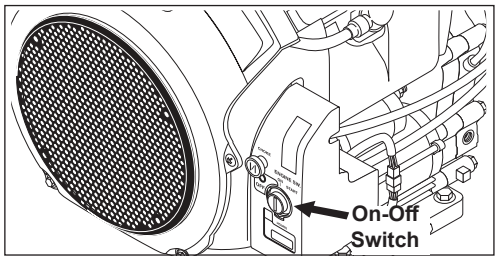

STEP 2: Turn engine switch to "OFF" position.

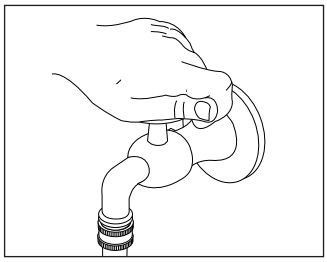

STEP 3: Turn off water supply.

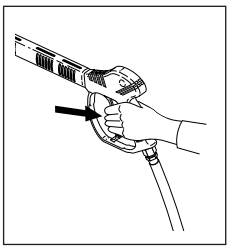

STEP 4: Press trigger to release water pressure.

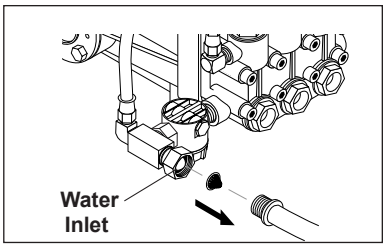

STEP 5: Disconnect the garden hose from the water inlet on the machine.

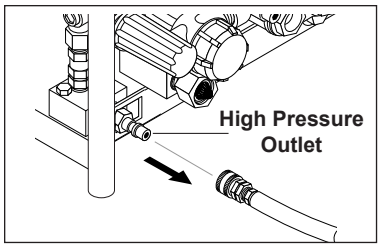

STEP 6: Disconnect the high pressure hose from high pressure outlet.

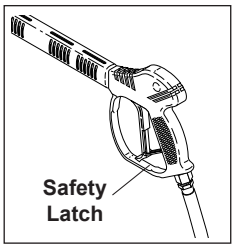

STEP 7: Engage the spray gun safety lock.

STORAGE

CAUTION: Always store your pressure washer in a location where the temperature will not fall below 32°F (0°C). The pump in this machine is susceptible to permanent damage if frozen. FREEZE DAMAGE IS NOT COVERED BY WARRANTY.

1. Stop the pressure washer, squeeze spray gun trigger to release pressure.
2. Detach water supply hose and high pressure hose.
3. Turn on the machine for a few seconds, until remaining water exits. Turn engine off immediately.
4. Drain the gas and oil from the engine.
5. Do not allow high pressure hose to become kinked.
6. Store the machine and accessories in a room which does not reach freezing temperatures.

CAUTION: Failure to follow the above directions will result in damage to your pressure washer.

When the pressure washer is not being operated or is being stored for more than one month, follow these instructions:

1. Replenish engine oil to upper level.
2. Drain gasoline from fuel tank, fuel line, fuel valve and carburetor.
3. Pour about one teaspoon of engine oil through the spark plug hole, pull the starter grip several times and replace the plug. Then pull the starter grip slowly until you feel increased pressure which indicates the piston is on its compression stroke and leave it in that position. This closes both the intake and exhaust valves to prevent rusting of cylinder.
4. Cover the pressure washer and store in a clean, dry place that is well ventilated away from open flame or sparks. **NOTE:** The use of a fuel additive, such as STA-BIL®, or an equivalent, will minimize the formulation of fuel deposits during storage. Such additives may be added to the gasoline in the fuel tank of the engine, or to the gasoline in a storage container.

After Extended Storage

CAUTION: Prior to restarting, thaw out any possible ice from pressure washer hoses, spray gun or wand.

Engine Maintenance

During the winter months, rare atmospheric conditions may develop which will cause an icing condition in the carburetor. If this develops, the engine may run rough, lose power and may stall. This temporary condition can be overcome by deflecting some of the hot air from the engine over the carburetor area. **NOTE:** Refer to the engine manufacturer's manual for service and maintenance of the engine.

TROUBLESHOOTING

PROBLEM	POSSIBLE CAUSE	SOLUTION
LOW OPERATING PRESSURE	Insufficient water supply. Closed faucet. Inlet hose kinked	Use larger garden hose; clean inlet water screen. Open faucet.
	Clogged inlet hose strainer	Check plumbing system for leaks. Retape leaks with teflon tape.
	Faulty or mis-adjusted unloader valve	Adjust unloader for proper pressure. Install repair kit when needed. Contact local dealer.
	Worn packing in pump	Contact local dealer.
	Machine has been stored in freezing temperatures	Thaw out machine completely, including hose, spray gun and wand.
	Slow engine RPM	Contact local dealer.
FLUCTUATING PRESSURE	Worn or dirty pump valves	Contact local dealer.
	Nozzle is obstructed	Use nozzle wire in accessory kit.
	Pump sucking air, inlet hose leaking	Check all pump lines and connections.
PRESSURE LOW AFTER PERIOD OF NORMAL USE	Nozzle worn	Replace nozzle.
	Unloader valve worn	Replace unloader valve.
ENGINE WILL NOT START OR STOPS WHILE OPERATING	Low oil shutdown	Fill engine with oil.
	Out of gas	Fill fuel tank.
	Water in gasoline	Drain gas tank; fill with clean fuel.
ENGINE IS OVERLOADED	Nozzle partially blocked	Clean nozzle.
	Excessive pressure from high engine RPM	Adjust engine throttle to lower RPM.
WATER OR OIL LEAKING FROM BOTTOM OF PUMP	A small amount of leaking is normal	If excessive leaking occurs, contact local dealer.
PRESENCE OF WATER IN PUMP OIL	Water sprayed at machine	Change oil. Direct spray away from machine.
	High humidity in air	Check and change oil twice as often.
	Piston packing worn. Oil seal worn.	Contact local dealer.
ENGINE OPERATES FOR 15 MIN. THEN STOPS	Not enough gas or engine oil	Fill tank with gas. Check oil level.
	Vapor lock developed by heat of day	Keep gas tank full to avoid vapor locking.
	Obstruction in fuel filter	Clean or replace fuel filter.
ENGINE LACKS POWER	Dirty air filter	Replace air filter.
ENGINE FALTERS	Choke is opened too soon	Move choke to halfway position until engine runs smoothly.

TROUBLESHOOTING

PROBLEM	POSSIBLE CAUSE	SOLUTION
WATER DRIPPING FROM UNDER PUMP	Piston packing worn	Contact local dealer.
	O-Ring plunger retainer worn	Contact local dealer.
	Cracked piston	Contact local dealer.
OIL DRIPPING	Oil seal worn or damaged	Contact local dealer.
WATER LEAKING FROM PUMP PROTECTOR	Spray gun closed with machine running 5 minutes or longer	Open spray gun or turn off machine.
	Excess water supply pressure	Place a pressure regulator at end of 50' garden hose.
NO DETERGENT	Detergent suction tube not properly connected to machine	Check connection.
	Detergent is too thick	Dilute detergent. For best results, use our detergent.
	Detergent filter valve is at lowest setting	Set detergent filter valve to a higher setting.
	Filter on detergent suction tube is clogged	Run warm water through filter to remove debris.
	Damaged or clogged detergent suction tube	Remove obstruction or replace detergent suction tube.
	A high pressure nozzle is attached.	Replace with black detergent nozzle.
	Discharge nozzle is obstructed	Blow out or remove debris with fine needle
GARDEN HOSE CONNECTION LEAKS	Loose fittings	Tighten fittings.
	Missing/worn rubber washer	Insert new washer.
SPRAY WAND LEAKS	Spray wand not properly attached	Slide the spray wand into the gun. Turn the wand collar clockwise onto the spray gun threads until tight.
	Broken o-ring	Contact local dealer to order an o-ring.
PUMP IS NOISY	Pump is sucking air	Check that hoses and fittings are air tight. Turn off machine and purge pump by squeezing trigger gun until a steady flow of water emerges through nozzle.

PREVENTATIVE MAINTENANCE

This pressure washer was produced with the best available materials and quality craftsmanship. However, you as the owner have certain responsibilities for the correct care of the equipment. Attention to regular preventative maintenance procedures will assist in preserving the performance of your equipment. Contact your dealer for maintenance. Regular preventative maintenance will add many hours to the life of your pressure washer. Perform maintenance more often under severe conditions.

PREVENTATIVE MAINTENANCE		
Pump Oil (Non foaming) SAE 10W-40	Inspect	Daily inspect the oil level
	Change	After first 50 hours, then every 500 hours or annually
Replace high pressure nozzle		Every 6 months
Replace quick connects		Annually
Clean water screen/filter		Weekly
Replace HP hose		Annually if there is any sign of wear
Grease Motor		Every 10,000 hours

OIL CHANGE RECORD

Check pump oil and engine oil level before first use of your new pressure washer.

Date Oil Changed Month/Day/Year	Estimated Operating Hours Since Last Oil Change	Date Oil Changed Month/Day/Year	Estimated Operating Hours Since Last Oil Change

NOTE: Read engine manual for any maintenance or service questions.

SPECIFICATIONS

HD Models

Machine Model	Engine Pulley	Pulley Description	Engine Bushing#.	Bushing Description	Pump Pulley	Pulley Description	Pump Bushing#
HD-4.0/50 Pb Cage	9.802-392.0	3TB34	9.802-404.0	P2 x 1"	9.802-396.0	3BK90H	9.802-402.0
HD-4.5/50 Pb Cage	9.802-392.0	3TB34	9.802-405.0	P2 x 1-1/8"	8.715-618.0	3BK80H	9.802-402.0
HD-3.7/35 Pb Cage	8.715-576.0	2BK32H	9.802-399.0	H x 1"	8.715-593.0	2BK90H	9.802-402.0
HD-4.0/50 Pb Cage K	9.802-392.0	3TB34	9.802-405.0	P2 x 1-1/8"	9.802-396.0	3BK90H	9.802-402.0
HD-4.5/50 Pb Cage K	9.802-392.0	3TB34	9.802-405.0	P2 x 1-1/8"	8.715-618.0	3BK80H	9.802-402.0

BR Models

Machine Model	Engine Pulley	Pulley Description	Engine Bushing#	Bushing Description	Pump Pulley	Pulley Description	Pump Bushing#
BR-405037E	9.802-392.0	3TB34	9.802-404.0	P2 x 1"	9.802-396.0	3BK90H	9.802-402.0
BR-455037E	9.802-392.0	3TB34	9.802-405.0	P2 x 1-1/8"	8.715-618.0	3BK80H	9.802-402.0
BR-373537	8.715-576.0	2BK32H	9.802-399.0	H x 1"	8.715-593.0	2BK90H	9.802-402.0
BR-404027	9.802-382.0	2BK34H	9.802-399.0	H x 1"	8.715-593.0	2BK90H	9.802-403.0

BD Models

Machine Description	Bushing Model	Belt Part No.	Belt Desc./Qty.	Pump Part No.	Unloader Part No.	Engine Description	Engine Part No.
BD-405037E	25mm	8.749-965.0	3BX42 (1)	8.921-659.0	9.802-360.0	GX630 (688cc)	8.752-149.0
BD-455039E	25mm	8.749-965.0	3BX42 (1)	8.921-659.0	9.802-360.0	GX690 (688cc)	8.760-341.0
BD-373539	24mm	9.802-418.0	BX39 (2)	8.751-180.0	8.750-300.0	GX390 (390cc)	8.750-580.0
BD-404029	25mm	9.802-420.0	BX43 (2)	8.920-583.0	8.750-300.0	Vanguard (479cc)	8.715-065.0
BD-405039EK	25mm	8.749-965.0	3BX42 (1)	8.921-659.0	9.802-360.0	Karcher V-Twin (764cc)	8.759-746.0
BD455039EK	25mm	8.749-965.0	3BX42 (1)	8.921-659.0	9.802-360.0	Karcher V-Twin (764cc)	8.759-746.0

MP Models

Machine Description	Bushing Model	Belt Part No.	Belt Desc./Qty.	Pump Part No.	Unloader Part No.	Engine Description	Engine Part No.
MP-455034E	25mm	8.749-965.0	3BX42 (1)	8.921-655.0	9.802-360.0	GX690 (688cc)	8.760-341.0
MP-373534	24mm	9.802-418.0	BX39 (2)	8.904-869.0	8.750-300.0	GX390 (390cc)	8.750-580.0
MP-455034EK	25mm	8.749-965.0	3BX42 (1)	8.921-655.0	9.802-360.0	Karcher V-Twin (764cc)	8.759-746.0

HOSE & SPRAY GUN ASSEMBLY AND PARTS LIST

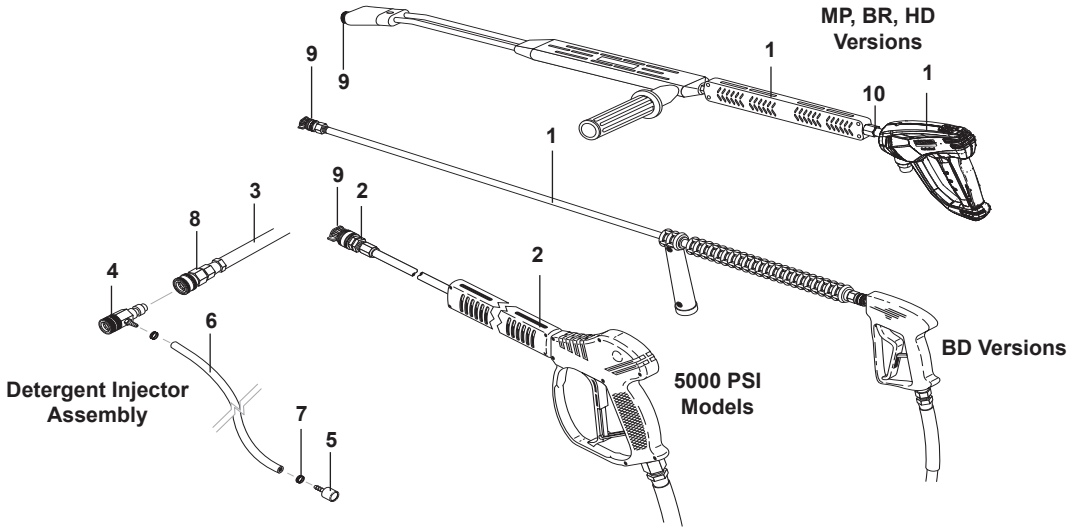

ITEM	PART NO.	DESCRIPTION	QTY
1	9.802-222.0	Wand, VP W/Coupler & Nozzle X-Series (BR and HD Models)	1
	8.711-293.0	Wand, VP Lance, AL344 w/Coupler & Soap Nozzle (MP Models)	1
	8.904-425.0	Wand, Side Grip, 47.5" w/Couplers (BD Models)	1
	8.725-388.0	Wand, Single, 48", Insulated W/ Side Grip	1
	9.802-164.0	Coupler, 1/4" Female Brass (BD models)	1
	8.710-384.0	Gun, St-1500, 5000 PSI, 10.4 Gpm (BR and HD Models)	1
	4.775-054.0	EASY!Force Advanced KNA	1
	8.904-490.0	Spray Gun Assembly with Nipple, Hotsy	1
	8.751-235.0	Gun, Hotsy, H1050, 5000 PSI, 10.4 GPM	1
2	9.802-228.0	Spray Gun Assy w/ Wand & Coupler (5000 PSI Models)	1
	9.802-227.0	Spray Gun Wand 5000 PSI, 52" (5000 PSI Models)	1
	8.756-030.0	Coupler, 1/4"Socket, Male, Brass	1
3	8.925-130.0	Hose, 3/8" X 50', R1, SO X SW, CPL (BR, MP, BD and HD Models to 4000 PSI)	1
	8.925-132.0	Hose, 3/8" X 50', R2, SO X SW, CPL (BR, MP, BD and HD Models to 5000 PSI)	1
4	9.802-217.0	Inector Assembly, 3-5 GPM, 0.083 (Models to 4000 PSI)	1
	9.802-216.0	Injector Chem Non Adj. 3-5 GPM. 0.083	1
	9.802-217.0	Injector Assembly, 5500 PSI (5000 PSI Models)	1
	9.802-167.0	Coupler, 3/8" Female, 11,000 PSI	1
	9.802-168.0	Nipple, 3/8" Fem, 11,000 PSI	1
5	8.707-057.0	Strainer, Plastic, 1/4" Hose Barb	1
6	9.802-251.0	Tube, 1/4" X 1/2", Clear Viny	6 ft.
7	6.390-126.0	Clamp, Hose, .46-.54 ST	2
8	9.802-167.0	Coupler, 3/8" Female, 11,000 PSI Snap-Tite (5000 PSI Models)	1
	9.802-166.0	Coupler,3/8" Female	1
9	9.802-296.0	Nozzle SAQCMEG, 1504, Yellow (All Except 4 GPM/5000 PSI Models)	1
	9.802-297.0	Nozzle SAQCMEG, 2504, Green (All Except 4 GPM/5000 PSI Models)	1
	9.802-298.0	Nozzle SAQCMEG, 4004, White (All Except 4 GPM/5000 PSI Models)	1
	8.708-713.0	▲Nozzle Kit, Size 04, 4-Pack (All Except 4 GPM/5000 PSI Models)	1
	9.802-292.0	Nozzle SAQCMEG, 1503.5, Yellow (4 GPM/5000 PSI Models)	1
	9.802-293.0	Nozzle SAQCMEG, 2503.5, Green (4 GPM/5000 PSI Models)	1
	9.802-294.0	Nozzle SAQCMEG, 4003.5, White (4 GPM/5000 PSI Models)	1
	8.708-712.0	▲Nozzle, Kit, Size 03.5, 4-Pack (4 GPM/5000 Models)	1
	9.802-311.0	Nozzle, COMPL, QCHEM-6540, Brass	1
10	8.705-356.0	Adaptor, Steel 1/4'Mx1/4'F ZI (MP-373534, MP-343084E)	1

▲Not Shown

THANK YOU!
MERCI! DANKE! ¡GRACIAS!

Registrieren Sie Ihr Produkt und profitieren Sie von vielen Vorteilen.

Register your product and benefit from many advantages.

Enregistrez votre produit et bénéficier de nombreux avantages.

Registre su producto y aproveche de muchas ventajas.

www.kaercher.com/welcome ★★★★★

Bewerten Sie Ihr Produkt und sagen Sie uns Ihre Meinung.

Rate your product and tell us your opinion.

Évaluer votre produit et dites-nous votre opinion.

Reseñe su producto y díganos su opinión.

www.kaercher.com/dealersearch

Alfred Kärcher SE & Co. KG
Alfred-Kärcher-Str. 28-40
71364 Winnenden (Germany)
Tel.: +49 7195 14-0
Fax: +49 7195 14-2212