KÄRCHER

makes a difference

English..... 3

High pressure cleaner
Electric motor - Hot water

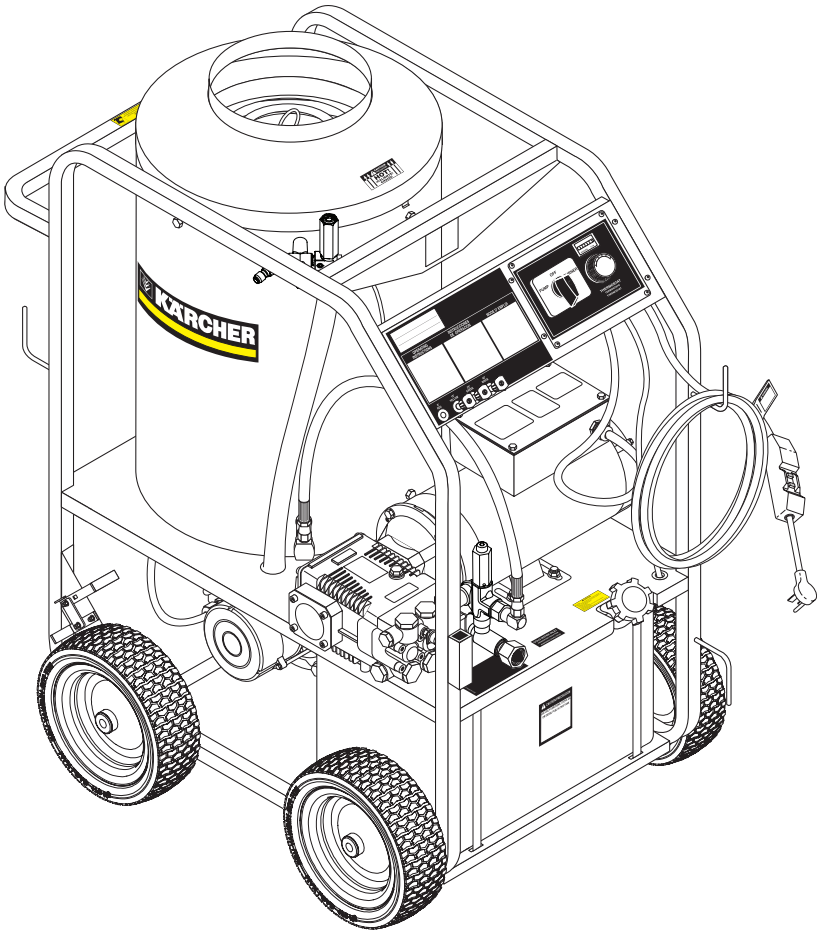

MODELS:

1.575-511.0
HDS 2.0/10 Ed Cage

1.575-512.0
HDS 1.9/15 Ed Cage

1.575-513.0
HDS 3.5/20 Ea Cage

Register your product
www.kaercher.com/welcome

9.800-191.0 - G (07/22)

CONTENTS

Introduction and Safety Information	3-5
Component Identification	7
Operating Instructions	8-9
Preventative Maintenance and Service	10-12
Exploded Views	13-14
Exploded Views Parts List	15-16
Control Panel Exploded View and Parts List	17
Hose & Spray Gun Assembly and Parts List	18
Downstream Injector Assembly and Parts List	19
UU1 Unloader Exploded View and Parts List	20
Pump Exploded View and Parts List	21-24
Burner Clear Fire Exploded View and Parts List	24-29
Troubleshooting	30
Maintenance Schedule	31

Model Number _____

Serial Number _____

Date of Purchase _____

The model and serial numbers will be found on a decal attached to the pressure washer. You should record both serial number and date of purchase and keep in a safe place for future reference.

INTRODUCTION & IMPORTANT SAFETY INFORMATION

Thank you for purchasing this Pressure Washer.

We reserve the right to make changes at any time without incurring any obligation.

Owner/User Responsibility:

The owner and/or user must have an understanding of the manufacturer's operating instructions and warnings before using this pressure washer. Warning information should be emphasized and understood. If the operator is not fluent in English, the manufacturer's instructions and warnings shall be read to and discussed with the operator in the operator's native language by the purchaser/owner, making sure that the operator comprehends its contents.

Owner and/or user must study and maintain for future reference the manufacturers' instructions.

The operator must know how to stop the machine quickly and understand the operation of all controls. Never permit anyone to operate the engine without proper instructions.

SAVE THESE INSTRUCTIONS

This manual should be considered a permanent part of the machine and should remain with it if machine is resold.

When ordering parts, please specify model and serial number. Use only identical replacement parts.

This machine is to be used only by trained operators.

IMPORTANT SAFETY INFORMATION

WARNING

READ OPERATOR'S MANUAL THOROUGHLY PRIOR TO USE.

WARNING: To reduce the risk of injury, read operating instructions carefully before using.

AVERTISSEMENT: Pour réduire le risque de blessures, lire attentivement les instructions de fonctionnement avant l'utilisation.

1. Read the owner's manual thoroughly. Failure to follow instructions could cause malfunction of the machine and result in death, serious bodily injury and/or property damage.
2. Know how to stop the machine and bleed pressure quickly. Be thoroughly familiar with the controls.
3. Stay alert — watch what you are doing.
4. All installations must comply with local codes. Contact your electrician, plumber, utility company or the selling distributor for specific details. If your machine is rated 250 volts or less, single phase will be provided with a ground fault circuit interrupter (GFCI). If rated more than 250 volts, or more than single phase this product should only be connected to a power supply receptacle protected by a GFCI.

DANGER: Improper connection of the equipment-grounding conductor can result in a risk of electrocution. Check with a qualified electrician or service personnel if you are in doubt as to whether the outlet is properly grounded. Do not modify the plug provided with the product - if it will not fit the outlet, have a proper outlet installed by a qualified electrician. Do not use any type of adaptor with this product

DANGER: Ne pas mettre d'antimousse, de solvants, de détacheur ou de produits chimiques de prépulvérisation dans le réservoir à solution. Ne pas laisser l'eau se déverser dans l'entrée du moteur de l'aspirateur. Essuyer tout écoulement dans le haut du réservoir à solution avant de remettre le réservoir de récupération en place. NE JAMAIS utiliser un adaptateur avec ce produit.

WARNING

KEEP WATER SPRAY AWAY FROM ELECTRICAL WIRING.

WARNING: Keep wand, hose, and water spray away from electric wiring or fatal electric shock may result.

AVERTISSEMENT: Garder la lance, le boyau et le jet d'eau à l'écart de tout câblage électrique ou des chocs électriques mortels pourraient survenir.

5. Toprotect the operator from electrical shock, the machine must be electrically grounded. It is the responsibility of the owner to connect this machine to a UL grounded receptacle of proper voltage and amperage ratings. Do not spray water on or near electrical components. Do not touch machine with wet hands or while standing in water. Always disconnect power before servicing.

WARNING

RISK OF EXPLOSION: OPERATE ONLY WHERE OPEN FLAME OR TORCH IS PERMITTED

WARNING: Flammable liquids can create fumes which can ignite, causing property damage or severe injury.

AVERTISSEMENT: Des liquides inflammables peuvent produire des vapeurs qui peuvent s'enflammer, causant ainsi des dommages à la propriété ou des blessures graves.

WARNING: Risk of explosion. Operate only where open flame or torch is permitted.

AVERTISSEMENT: Risque d'explosion. Utiliser uniquement dans des endroits où l'utilisation d'une flamme nue ou d'une torche est permise.

6. In oil burning models, use only kerosene, No. 1 home heating fuel, or diesel. If diesel is used, add a soot remover to every tankful.

IMPORTANT SAFETY INFORMATION

WARNING: Risk of fire — Do not add fuel when the product is operating or still hot.

AVERTISSEMENT: Risque d'incendie — Ne pas ajouter de carburant pendant que la machine fonctionner ou est encore chaude.

WARNING: Do not use gasoline crankcase draining or oil containing gasoline, solvents or alcohol. Doing so will result in fire and/or explosion.

AVERTISSEMENT: Ne pas utiliser d'essence, de drainage du carter de moteur ou d'essence contenant de l'huile, de solvants ou de l'alcool.

7. Oil burning appliances shall be installed only in locations where combustible dusts and flammable gases or vapors are not present. Do not store or use gasoline near this machine.
8. Do not allow acids, caustic or abrasive fluids to pass through the pump.
9. Never run pump dry or leave spray gun closed longer than 1-2 minutes.
10. Keep operating area clear of all persons.

WARNING: High pressure spray can cause paint chips or other particles to become airborne and fly at high speeds. To avoid personal injury, eye, hand and foot safety devices must be worn.

AVERTISSEMENT: Un jet haute pression peut écailler la peinture ou provoquer l'émission d'autres particules dans l'air et leur projection à hautes vitesses. Pour éviter les lésions corporelles, une protection des yeux, du visage, des mains et des pieds doit être portée lors de l'utilisation de cet équipement.

11. Eye, hand, and foot protection must be worn when using this equipment.

WARNING: This machine exceeds 85 db appropriate ear protection must be worn.

AVERTISSEMENT: Cette machine excède 85 dB et une protection de l'ouïe appropriée doit être portée.

WARNING: Hot discharge fluid. Do not touch or direct discharge stream at persons.

AVERTISSEMENT: Liquide de décharge chaud. Ne pas toucher ou décharger directement le jet vers des personnes ou des animaux, car cela risquerait de causer des blessures graves ou même la mort.

WARNING: This machine produces hot water and must have insulated components attached to protect the operator.
AVERTISSEMENT: Cette machine produit de l'eau chaude et doit comporter des composants isolés attachés pour protéger l'opérateur.

WARNING: Risk of injury. Hot surfaces can cause burns. Use only designated gripping areas of spray gun and wand. Do not place hands or feet on non-insulated areas of the pressure washer.

AVERTISSEMENT: Risque de blessures. Les surfaces chaudes peuvent causer des brûlures. Utiliser uniquement les zones de prise désignées du pistolet pulvérisateur et de la lance. Ne pas placer les mains ou les pieds sur des endroits non isolés de la laveuse à pression.

12. To reduce the risk of injury, close supervision is necessary when a machine is used near children. Do not allow children to operate the pressure washer. **This machine must be attended during operation.**

WARNING: Grip cleaning wand securely with both hands before starting. Failure to do this could result in injury from a whipping wand.

AVERTISSEMENT: Agripper la lance de nettoyage avec les deux mains avant de commencer. Le non-respect de cette consigne pourrait mener à des blessures causées par le mouvement violent de la lance.

13. Never make adjustments on machine while in operation.
14. Be certain all quick coupler fittings are secured before using pressure washer.

IMPORTANT SAFETY INFORMATION

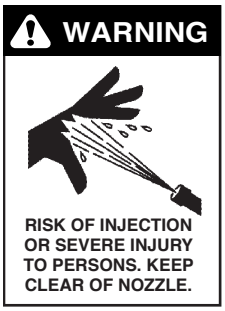

WARNING: High pressure developed by these machines will cause personal injury or equipment damage. Keep clear of nozzle. Use caution when operating. Do not direct discharge stream at people, or severe injury or death will result.

AVERTISSEMENT: La haute pression générée par ces machines causera des lésions corporelles ou des dommages à l'équipement. Se tenir à l'écart de la buse. Faire preuve de prudence lors de l'utilisation. Ne pas décharger directement le jet vers des personnes ou des animaux, car cela risquerait de causer des blessures graves ou même la mort.

WARNING: Protect machine from freezing.

AVERTISSEMENT: Protéger la machine contre le gel.

15. To keep machine in best operating conditions, it is important you protect machine from freezing. Failure to protect machine from freezing could cause malfunction of the machine and result in death, serious bodily injury, and/or property damage. Follow storage instructions specified in this manual.

16. Inlet water must be clean fresh water and no hotter then 90°F.

WARNING: Risk of asphyxiation. Use this product only in a well ventilated area.

AVERTISSEMENT: Risque d'asphyxie. Utiliser ce produit uniquement dans un endroit bien ventilé.

17. Avoid installing machines in small areas or near exhaust fans. Adequate oxygen is needed for combustion or dangerous carbon monoxide will result.
18. Manufacturer will not be liable for any changes made to our standard machines or any components not purchased from us.
19. The best insurance against an accident is precaution and knowledge of the machine.

WARNING: Be extremely careful when using a ladder, scaffolding or any other relatively unstable location. The cleaning area should have adequate slopes and drainage to reduce the possibility of a fall due to slippery surfaces.

AVERTISSEMENT: Faire preuve d'une extrême prudence au moment d'utiliser une échelle, des échafaudages ou toute autre surface relativement instable. La zone de nettoyage doit avoir une pente et un drainage adéquats pour réduire la possibilité d'une chute due à une surface glissante.

20. Do not overreach or stand on unstable support. Keep good footing and balance at all times.
21. Do not operate this machine when fatigued or under the influence of alcohol, prescription medications, or drugs.

WARNING: Do not spray machine or any people, animals or electrical parts.

AVERTISSEMENT: Ne pas vaporiser sur la machine ou les gens, les animaux ou les pièces électriques.

Follow the maintenance instructions specified in the manual.

IMPORTANT SAFETY INFORMATION

INSTALLATION

Place machine in a convenient location providing ample support, draining and room for maintenance.

This machine is intended for indoor use. Machine must be stored indoors when not in use.

Location:

The location should protect the machine from damaging environmental conditions, such as wind, rain, and freezing.

1. This machine should be run on a level surface where it is not readily influenced by outside sources such as strong winds, freezing temperature, rain, etc. It should be located to allow accessibility for refilling of fuel, adjustments, and maintenance. Normal precautions should be taken by the operator of the machine to prevent moisture from reaching the electrical controls.
2. It is recommended that a partition be made between the wash area and the machine to prevent water spray from coming in contact with the machine. Excess moisture reaching any electric components or electrical controls will reduce machine life and may cause electrical shorts.
3. During installation of the machine, beware of poorly ventilated locations or areas where exhaust fans may cause an insufficient supply of oxygen. Sufficient combustion can only be obtained when there is a sufficient supply of oxygen available for the amount of fuel being burned. If it is necessary to install a machine in a poorly ventilated area, outside fresh air may have to be piped to the burner and a fan installed to bring air into the machine.

Avoid small locations or areas near exhaust fans.

COMPONENT IDENTIFICATION

CAUTION HOT WATER:
Must use insulated spray gun and wand.

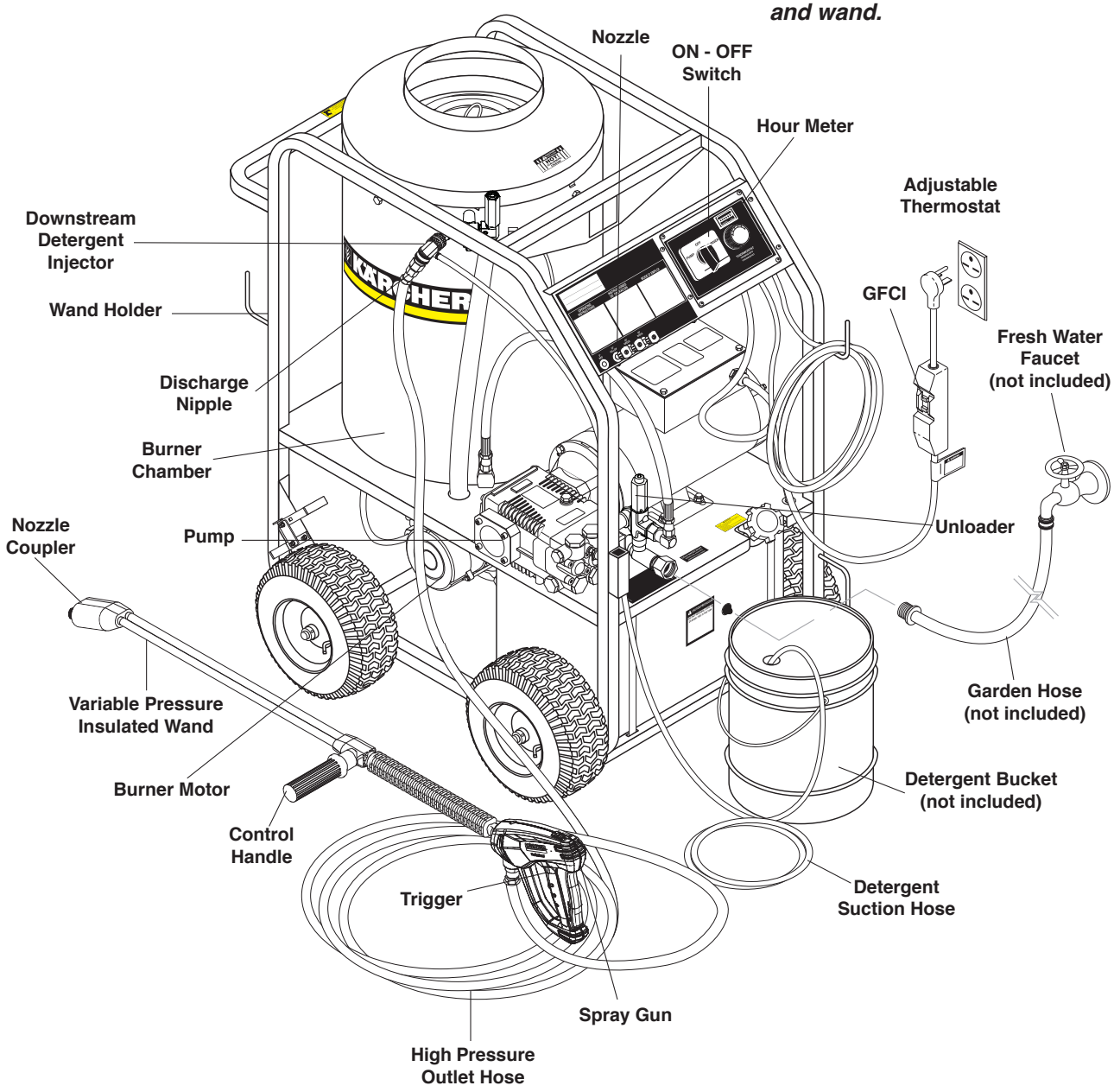

OPERATING INSTRUCTIONS

Electrical:

This machine, when installed, must be electrically grounded in accordance to local codes. Check for proper power supply using a volt meter.

Placement:

Do not locate near any combustible material. Keep all flammable material at least 20 feet away.

Allow enough space for servicing the machine.

Local code will require certain distances from floor and walls. (Two feet away from walls should be adequate.)

Water Source:

The water source for the pressure washer should be supplied by a minimum 5/8" I.D. garden hose with a city water pressure of not less than 30 PSI. If the water supply is inadequate, or if the garden hose is kinked, the attached pressure washer will run very rough and the burner will not fire.

Connection:

Connect the wand, nozzle, hose and spray gun (where applicable). On pipe thread connections, use teflon tape to avoid water leaks. (See Component Identification).

Venting:

Adding exhaust vent pipe to your oil fired burner is not recommended because restricted air flow causes carbon buildup, which affects the operation, and increases maintenance on the coil. If a stack must be used, refrain form using 90° bends. If the pipe can not go straight up then use only 45° bends and go to the next size pipe. The overall pipe length must not exceed 6 feet in length.

STARTING AND OPERATING INSTRUCTIONS

To Start:

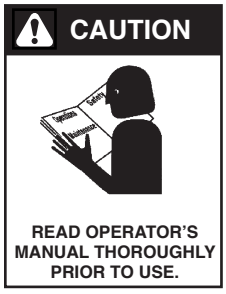

1. **STOP!** Read operator's manual before operating. Failure to read operation and warning instructions may result in personal injury or property damage.
2. Connect water supply hose and turn on water.
3. Check fuel tank and pump oil levels.
4. Connect high pressure hose to discharge nipple by sliding quick coupler collar back. (If detergent is to be applied, insert a detergent injector as shown in Component Identification).
5. Insert quick coupler onto discharge nipple and secure by pushing quick coupler collar forward.
6. Securely attach the desired high pressure nozzle into wand coupler as described in steps 4 and 5.
7. Connect the power cord into the proper electrical outlet, then push in the GFCI reset button (Refer to serial plate for information.)
8. Grip spray gun handle securely and pull trigger. Then turn variable pressure control handle counterclockwise.
9. Turn switch to pump position. When a steady stream of water flows from the spray gun and wand, the machine is ready for cold water cleaning by turning the variable pressure control handle clockwise to raise the pressure.
10. For hot water washing, turn the switch to the burner position. (The burner will light automatically when the trigger on the spray gun is pulled.)

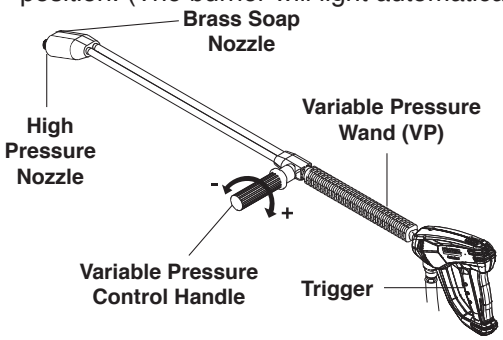

Selection of high or low pressure is accompanied by turning the handle. **Note:** High pressure nozzle must be inserted at end of wand to obtain high pressure. To apply soap read operator's manual.

To Stop:

1. If using the detergent injector, place the suction line in a bucket of water allowing detergent to be flushed from system.
2. Turn burner switch off and continue spraying water, allowing the water to cool.
3. After water has cooled to less than 100°F, turn the attached pressure washer off.
4. Turn garden hose water off. Open the spray gun to relieve remaining pressure.
5. Protect from freezing.

HOW TO USE THE DETERGENT INJECTOR

WARNING

SOME DETERGENTS MAY BE HARMFUL IF INHALED OR INGESTED.

WARNING: Some detergents may be harmful if inhaled or ingested causing severe nausea, fainting or poisoning. The harmful elements may cause property damage or severe injury.

The machine can siphon and mix detergents with the use of Shark's detergent injector kit.

1. Pull injector quick coupler collar back and secure on discharge nipple. Injector valve body arrow should point in direction of flow.
2. Connect high pressure hose to injector nipple securing quick coupler.
3. Start machine as outlined in Operating Instructions.
4. Place detergent pick-up tube into container of detergent solution.
5. Turn pressure control handle counterclockwise on the variable pressure wand. This lowers the pressure by directing the water flow through the soap nozzle and allows the detergent injector to siphon soap.
6. Open trigger spray gun. Water detergent ratio is approximately 15 to 1.
7. When you finish washing, rinse by simply turning the variable pressure wand control handle clockwise to increase pressure.

   NOTE: The detergent injector will not siphon with water flowing through the high pressure nozzle at the end of the wand.
8. For clean up, place detergent pick-up tube into container of clear water and follow steps 5 and 8 to prevent detergent deposits from damaging the injector.

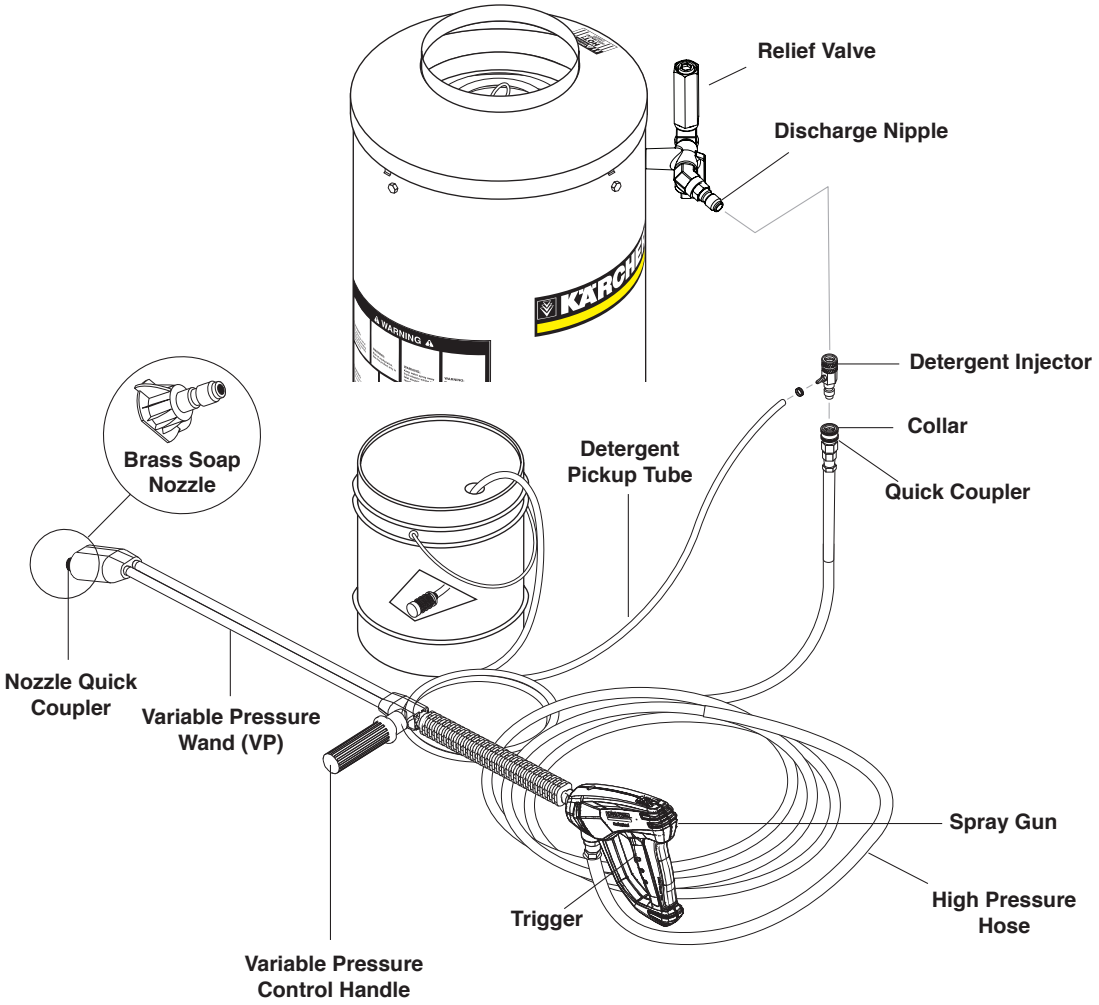

PREVENTATIVE MAINTENANCE AND SERVICE

PREVENTATIVE MAINTENANCE

1. Use clean fuel - kerosene, No. 1 home hearing fuel or diesel fuel. Clean or replace fuel filter every 100 hours of operation. Avoid water contaminated fuel as it will seize up the fuel pump. De-soot coils monthly. Use an additive if diesel is being used.
2. Check to see that the attached pressure washer water pump is properly lubricated.
3. Follow Winterizing Procedures to prevent freeze damage to pump coils.
4. Always neutralize and flush detergent from system after use.
5. If water is known to be high in mineral content, use a water softener in your water system or de-scale as needed.
6. Do not allow acidic, caustic or abrasive fluids to be pumped through system.
7. Always use high grade quality cleaning products.
8. Never run pump dry for extended periods of time.
9. If machine is operated with smoking or eye burning exhaust, coils will soot up, not letting water reach maximum operating temperature. (See section on Air Adjustments.)
10. Never allow water to be sprayed on or near engine or burner assembly or any electrical component.
11. Periodically delime coils per instructions.

It is advisable, periodically, to visually inspect the burner. Check air inlet to make sure it is not clogged or blocked. Wipe off any oil spills and keep this equipment clean and dry.

The areas around the pressure washer should be kept clean and free of combustible materials, gasoline and other flammable vapors and liquids.

The flow of combustion and ventilating air to the burner must not be blocked or obstructed in any manner.

MAINTENANCE AND SERVICE

Unloader Valves:

Unloader valves are preset and tested at the factory before shipping. Occasional adjustment of the unloader may be necessary to maintain correct pressure. Call your local dealer for assistance.

Winterizing Procedure:

Damage due to freezing is not covered by warranty. Adhere to the following cold weather procedures whenever washer must be stored or operated outdoors under freezing conditions. During winter months, when temperatures drop below 32°F, protecting your machine against freezing is necessary. Store machine in a heated room. If this is not possible then mix a 50/50 solution of anti-freeze/water into a 5 gallon bucket. Place a short section of garden hose into bucket and connect it to machine. Elevate bucket and turn pump on to siphon anti-freeze through machine. If compressed air is available, an air fitting can be screwed into the inlet connector and, by injecting compressed air, all water will be blown out of system.

High Limit Hot Water Thermostat:

For safety, each machine is equipped with a high limit control switch. In the event that the temperature of the water should exceed its operating temperature, the high limit control will turn the burner off until the water cools.

Pumps:

Use only SAE 30W non-detergent oil. Change oil after the first 50 hours of use. Thereafter, change the oil every three months or at 500 hour intervals. Oil level should be checked by using the dipstick found on top of the pump or the red dot visible through the oil gauge window. Oil should be maintained at that level.

Cleaning of Coils:

In alkaline water areas, lime deposits can accumulate rapidly inside the coil pipes. This growth is increased by the extreme heat build up in the coil. The best prevention for liming conditions is to use high quality cleaning detergents. In areas where alkaline water is an extreme problem, periodic use of Deliming Powder (part #9.804-059.0) will remove lime and other deposits before coil becomes plugged. (See Deliming Instructions for use of Deliming Powder.)

Deliming Coils:

Periodic flushing of coils is recommended.

1. Fill a container or optional float tank with 4 gallons of water, then add 1 lb. of deliming powder. Mix thoroughly.
2. Remove wand assembly from spray gun and put spray gun into container. Secure the trigger on the spray gun into the open position.
3. Attach a short section (3-5 ft.) of garden hose to machine to siphon solution from an elevated container. Turn pump switch on, allowing solution to be pumped through coils back into the container. Solution should be allowed to circulate 2-4 hours.
4. After circulating solution flush entire system with fresh water. Reinstall wand assembly to spray gun.

Removal of Soot in Heating Coil:

In the heating process, fuel residue in the form of soot deposits may develop between the heating coil pipe and block air flow which will affect burner combustion. When soot has been detected on visual observation,

the soot on the coil must be washed off after coil has been removed using the following steps:

1. Remove the tank head assembly by lifting the tank head off.
2. Remove the two pipe nipples and associated fittings.
3. Lift the coil out of the outer wrap.

CAUTION: the coil weighs about 80 lbs. Use proper lifting techniques.

4. Clean, repair and replace the coil by reversing the above steps.

Coil Reinstallation

Reinstall by reversing the above steps 4 through 1.

Fuel:

Use clean fuel oil that is not contaminated with water and debris. Replace fuel filter and drain tank every 100 hours of operation. Use Kerosene No. 1 or No. 2 Heating Fuel (ASTM D306) or diesel only. **NEVER** use gasoline in your burner tank. Gasoline is more combustible than fuel oil and could result in a serious explosion. **NEVER** use crankcase or waste oil in your burner. Fuel unit malfunction could result from contamination.

Ignition Circuit:

Periodically inspect wires, spring contact and electrodes for condition, security and proper spacing. **For transformer test (CAUTION 10,000 VOLTS)** use defect free insulated screwdriver and keep fingers off blade! Lay blade across one contact: OK if arc will span 1/2" between end of blade and other contact (see following illustration).

Electrode Setting

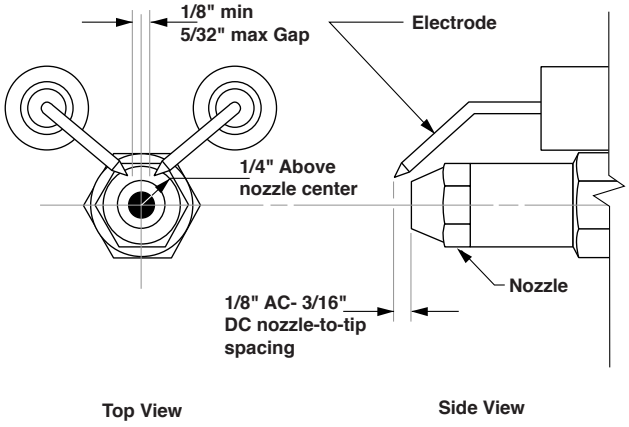

Burner Nozzle:

Keep the tip free of surface deposits by wiping it with a clean, solvent-saturated cloth, being careful not to plug or enlarge the nozzle. For maximum efficiency, replace the nozzle each season.

Fuel Control System:

The pressure washer utilizes a fuel solenoid valve located on the fuel pump to control flow of fuel to the combustion chamber. This solenoid is activated by a pressure switch located on the unloader valve. When an operator releases the trigger on the spray gun, the pressure drops, allowing the pressure switch to activate the fuel solenoid. The solenoid then closes, shutting off the supply of fuel to the combustion chamber. Controlling the flow of fuel in this way gives an instantaneous burn or no burn situation, thereby eliminating high and low water temperatures, and combustion smoke normally associated with machines incorporating a spray gun. Periodic inspection is recommended to insure that the fuel solenoid valve functions properly. This can be done by operating the machine and checking to see that when the trigger on the spray gun is in the off position, the burner is not firing.

Fuel Pressure Adjustment:

To adjust fuel pressure, turn the adjusting screw with a screwdriver (located on the fuel pump) clockwise to increase, counterclockwise to decrease. Do not exceed 200 PSI.

Wayne Burner Air Adjustment

Machines are preset and performance tested at the factory — elevation 100' above sea level. A one time correction for your location will pay off in economy, performance and extended service life. If a smoky or eye-burning exhaust is being emitted from the stack, two things should be checked.

First, check the fuel to be certain that kerosene or No. 1 home heating fuel is being used.

Next, check the air adjustment on the burner. An oily, black, smoky fire indicates a lack of air and the air band should be moved to allow the air to flow through the burner. Sharp, eye-burning fumes indicate too much air flowing through the combustion chamber. The air band should be moved to allow less air to flow through the burner.

To adjust: Start the machine and turn burner ON. Loosen the locking screws found in the air band openings (refer to illustration) and close air band until black smoke appears from burner exhaust vent. Next slowly open the air band until white smoke just starts to appear. Turn air band halfway back to the black smoke position previously noted. Tighten the locking screws.

PREVENTATIVE MAINTENANCE AND SERVICE

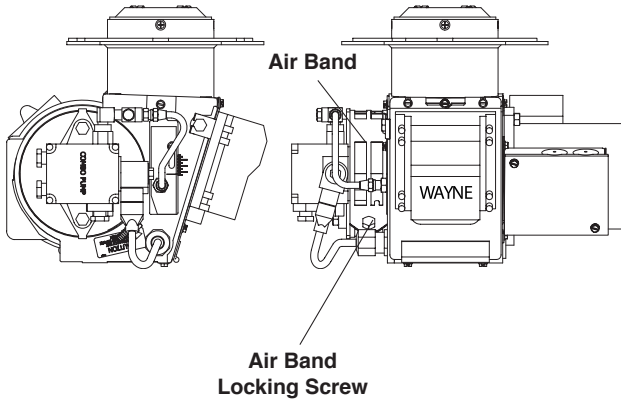

CAUTION: If white smoke appears from burner exhaust vent during start-up or operation, discontinue use and readjust air bands.

Wayne Burner Fuel Pressure Adjustment:

To adjust fuel pressure, first install a pressure gage into the port just after the pump fuel exit. Turn the adjusting screw (located at the regulator port) clockwise to increase, and counterclockwise to decrease. Do not exceed 205 psi or lower the pressure below 130 PSI, when checked at the post-pump pressure port.

The fuel pressure may need to be adjusted due to altitude. For every 500 ft altitude above sea level, the boiling point of water goes down 1 °F. At high altitude environments, this boiling point change may require the heat input to be lowered so the water input does not turn to steam earlier than at the factory settings and activate the pressure sensors and pressure relief equipment when the unit is operated and much higher altitudes from factory settings or local dealer site settings. Check with your dealer before making local site fuel pressure adjustments.

Also, as ambient temperature changes seasonally, the fuel temperature in the feed tank and air temperature inlet can impact fuel flow. In more extreme temperatures, this local-site adjustment may also require different fuel nozzles for fuel inlet temperatures that are at seasonal extremes (higher or lower) in locations where the temperature changes are beyond moderate temperatures of between 40°F and 90°F. Colder temperatures will make for a thicker flow and less fine a fuel spray while hotter temperatures will make for a thinner flow a more fine spray with the same nozzle. Consider alternate nozzle configurations from the baseline factory-supplied nozzle for operating in such temperature extremes if performance is not meeting needs with air band and fuel pressure settings alone.

NOTE: When changing fuel pump, a by-pass plug must be installed in return line port or fuel pump will not prime.

Karcher Clear Fire Oil Burner

Burner Air Adjustment: The oil burner on this machine is preset for operation at altitudes below 1000 feet. If operated at higher altitudes, it may be necessary to adjust the air band for a #1 or #2 smoke spot on the Bacharach scale.

To adjust, start machine and turn burner ON. Loosen two locking screws found on the air band and close air band until black smoke appears from burner exhaust vent. Note air band position. Next, slowly open the air band until white smoke just starts to appear. Turn air band halfway back to the previously noted position. Tighten locking screws.

KNA Burner Air Adjustment

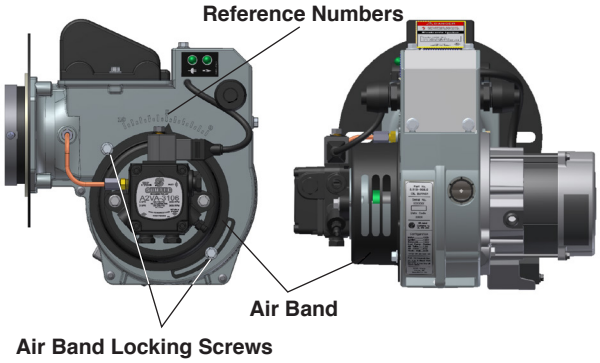

CAUTION: ***If white smoke appears from burner exhaust vent during start-up or operation, discontinue use and readjust air bands.***

NOTE: If a flue is installed, have a professional serviceman adjust your burner for a #1 or #2 smoke spot on the Bacharach scale.

EXPLODED VIEW - LEFT

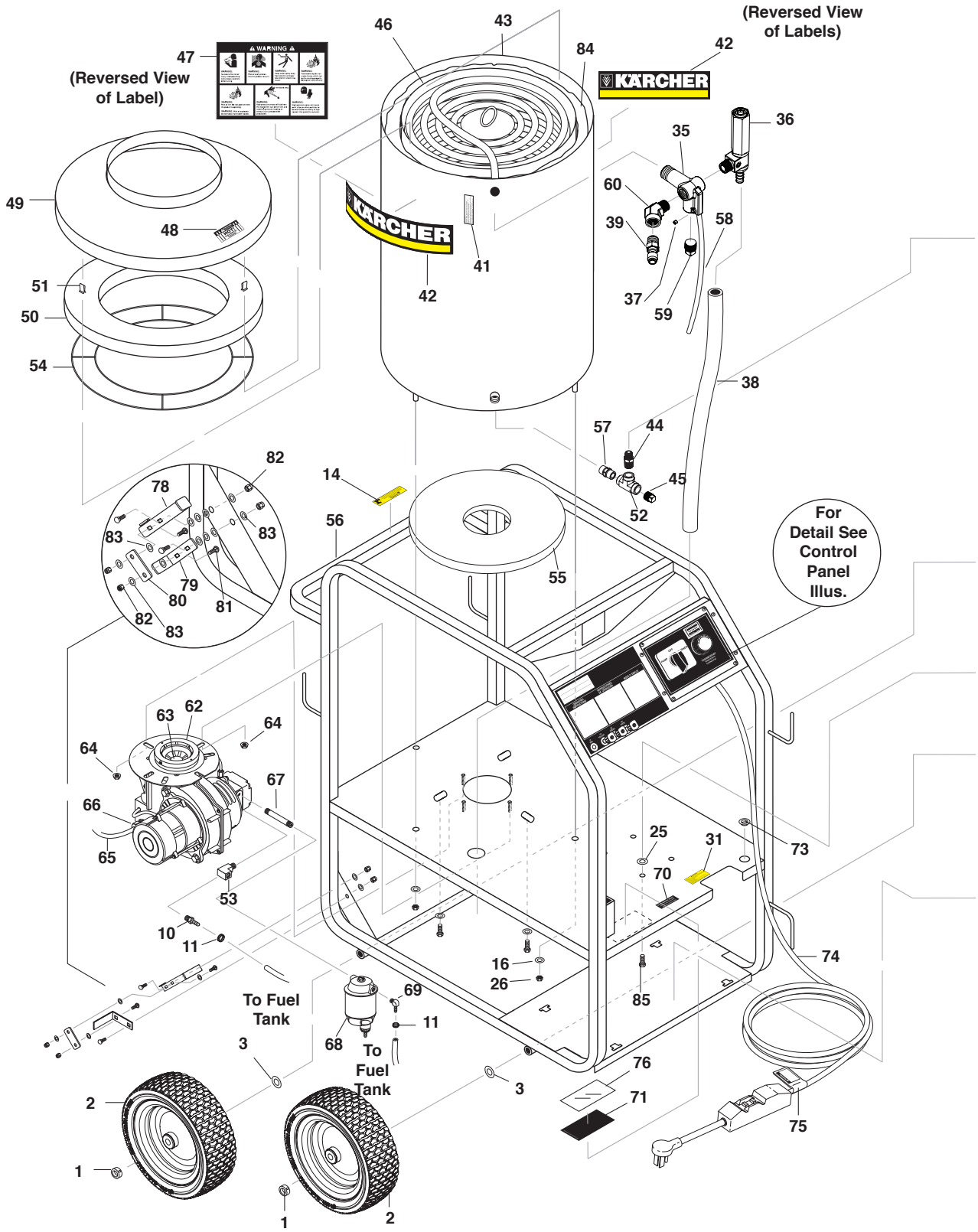

EXPLODED VIEW - RIGHT

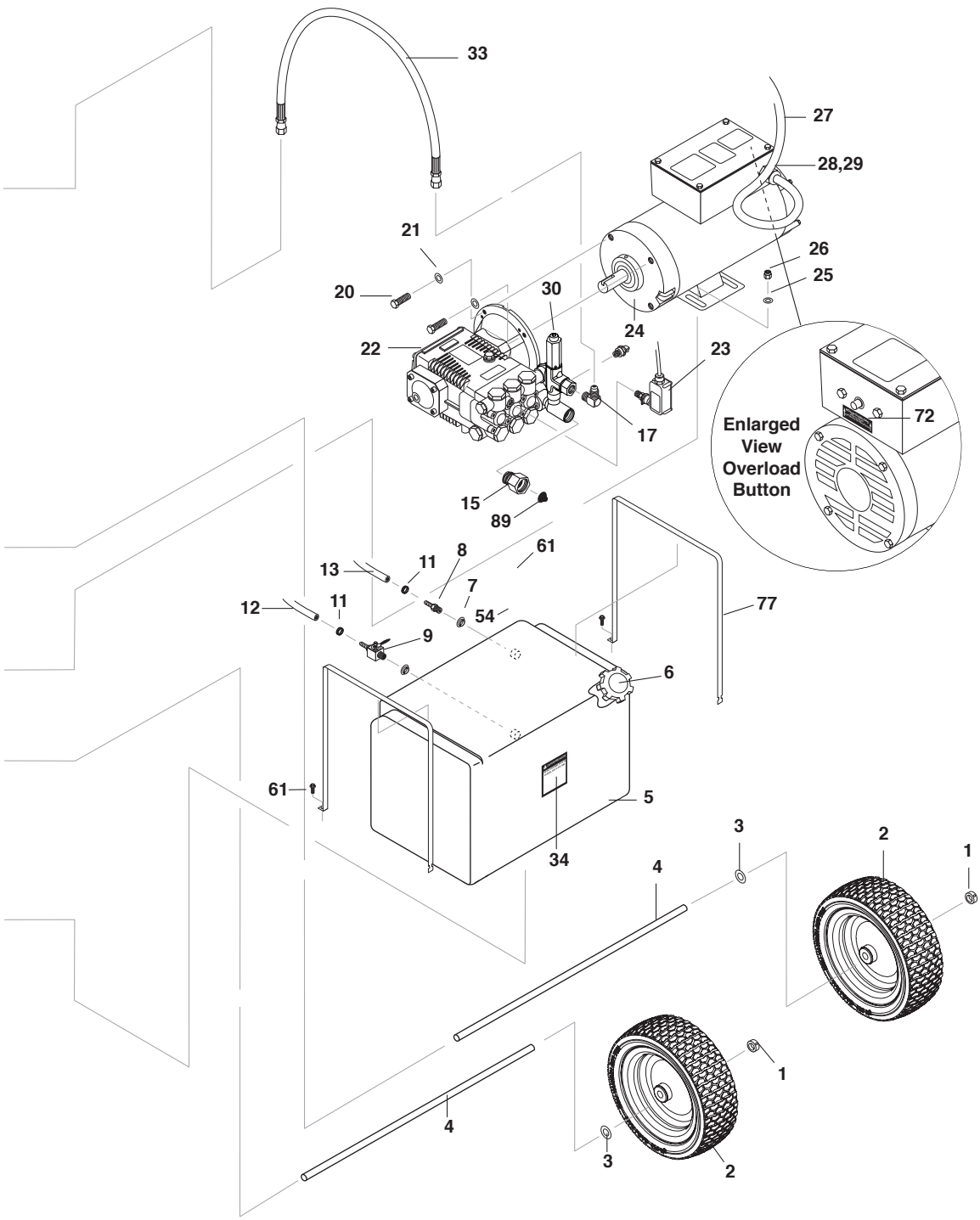

EXPLODED VIEWS PARTS LIST

ITEM	PART NO.	DESCRIPTION	QTY
1	9.802-782.0	Collar, 5/8" Bore Shaft	4
2	8.758-460.0	Wheel 12 In. Rim Steel	4
3	9.802-810.0	Washer, 5/8", Flat, SAE	4
4	8.922-672.0	Axle Long	2
5	9.802-081.0	Tank, Fuel 6 Gallon Blank	1
6	9.802-089.0	Cap, Fuel Tank, Plastic H60-AV	1
7	9.802-053.0	Bushing, Rubber, Nitrile	2
8	9.802-141.0	Hose Barb, 1/4" Barb x 3/8" Barb, Double	1
9	9.802-177.0	Valve, 1/4" Shut-Off	1
10	9.802-138.0	Hose Barb, 1/4" Barb x 1/4" ML Pipe	1
11	6.390-126.0	Clamp, Hose, UNI .46 - .54	4
12	9.802-254.0	Hose, 1/4" Push-On, Fuel Line	8"
13	9.802-254.0	Hose, 1/4" Push-On, Fuel Line	7"
14	9.800-018.0	Label, Tipover Hazard	1
15	8.757-203.0	SWIVEL, 1/2" M-NPTF x 3/4" GHF	1
16	9.198-014.0	Washer 21/64 X 1"	4
17	8.757-616.0	Elbow steel 1/2 JIC (M) x 3/8 BSPP (M) (352007A)	1
	8.757-935.0	Adapter steel 1/2 JIC x 3/8 NPTF (F) 90°	1
18	9.804-025.0	Pump Protector, 1/4", 145°	1
20	9.802-720.0	Bolt, 3/8" x 1", NC HH	4
21	9.802-807.0	Washer, 3/8", SAE, Flat Zinc	4
22	8.929-254.0	Pump KARCHER KFP2030S, 2.1 @3000 1725RPM (511.0, 512.0)	1
	8.929-259.0	Pump KARCHER KFP3530F, 3.5 @3000 3450RPM (513.0)	1
23	9.802-458.0	Switch, Pressure, N/O, 1/4" NPT SS	1
24	9.804-516.0	Motor, 1.5 HP 120V 1725 RPM (511.0)	1
	8.754-709.0	Motor, 2HP 1PH 115V 1750 RPM, 56C ODP	1
	9.802-341.0	Motor, 5HP 1PH 230V 3450 RPM (513.0)	1
25	9.802-804.0	Washer, 5/16" Flat, SAE	8
26	9.802-776.0	Nut, 5/16" ESNA, NC	8
27	9.802-427.0	Cord, Service, SOWA, 12/3 (512.0)	3 ft.
	9.802-436.0	Cord, Service, SEO, (10/3 511.0, 513.0)	2.67 ft.
28	8.752-969.0	Strain Relief, Lt, Str, 1/2 NPT 0.39-0.75ID (511.0, 512.0)	1
	9.802-518.0	Strain Relief, STRT LQ TITE (513.0)	1

ITEM	PART NO.	DESCRIPTION	QTY
29	9.802-526.0	Locknut, 3/4" 8465 (513.0)	1
30	8.754-696.0	Unloader, VBT Banjo 1/2M 3/8M, 3000PSI	1
	9.175-018.0	UU1 3500PSI,Universal Unloader (352007A)	1
31	9.800-049.0	Label, Manufacturer's Cleaning Solution	1
33	8.918-425.0	Hose, 3/8" x 29", 2 Wire, Pressure Loop	1
34	9.800-002.0	Label, Use Only Kerosene	1
35	8.757-240.0	Manifold coil outlet discharge w/slnt	1
36	8.902-433.0	Valve Safety, Relief	1
37	9.196-012.0	Plug 10-24UNF x 1/4	1
38	8.711-785.0	Hose, 3/8" Push-On	2.75 ft.
39	8.707-152.0	Nipple, 3/8", Male, Ssteel	1
41	9.800-021.0	Label, Hot Water Outlet	1
42	9.800-110.0	Label, Kärcher Logo	2
43	8.911-802.0	Coil wrap SS 16"	1
	8.911-800.0	Coil wrap SS 16" (For models HDS 3.5/20 EA)	1
44	8.757-655.0	Adapter Steel 1/2" JIC x 3/8"	1
	8.757-508.0	Adapter steel 1/2" JIC x 1/2" (For models HDS 3.5/20)	1
45	8.706-241.0	Plug 3/8" square head	1
	8.757-625.0	Plug 1/2" square head (For models HDS 3.5/20)	1
46	8.925-219.0	Spare coil 16" MTY	1
	8.925-218.0	Spare coil 16" MTY Large	1
47	9.800-041.0	Label, Warning, Text	1
48	9.800-006.0	Label, Hot/Caliete w/Arrows Warning	1
49	8.719-913.0	Top Hat, Coil	1
50	9.802-904.0	Insulation, Tank Head, 16" OD x 8" ID	1
51	9.802-825.0	Clip, Retaining U-Type	4
52	8.757-944.0	Tee steel 3/8"	1
	8.757-615.0	Tee steel 1/2" (For models HDS 3.5/20EA)	1
53	8.757-198.0	Elbow, 1/4" Street, Brass	1
54	9.803-108.0	Retainer Ring, Insulation	1
55	9.802-900.0	Insulation, Tank Bottom, 1" Blanket	1
56	9.803-120.0	Assembly, Frame, Black	1
57	8.705-974.0	Nipple steel hex 3/8"	1
	8.757-338.0	Nipple 1/2" Hex Steel (For models HDS 3.5/20 EA)	1
58	8.750-094.0	Thermostat, 150C/302F	1
59	8.706-241.0	Plug, 3/8, SQ head	1
60	8.757-551.0	Elbow Street Steel 3/8" 45°	1
61	9.802-753.0	Screw, 1/4-20 x 3/4" Loc	2

EXPLODED VIEWS PARTS LIST

ITEM	PART NO.	DESCRIPTION	QTY
62	8.756-181.0	Burner, MSR 3.75 120V 1T 120V S	1
	8.756-709.0	Burner, MSR, 230V 1T 230V S (For models HDS 3.5/20 EA)	1
63	8.700-970.0	Fuel Nozzle 1.75 X 90 A (For models HDS 3.5/20 EA)	1
	8.756-861.0	Fuel Nozzle, 1.10 X 80 BZ	1
64	9.802-781.0	Nut, 3/8" Flange, Whiz Loc, NC	4
65	9.802-424.0	Cord, Service, SEO, 16/4, Coleman	64"
66	9.802-519.0	Strain Relief, 1/2" Metal, Two Screw	1
67	9.803-043.0	Nipple, Pipe 1/4"x2" Zinc SCH 80mpt	1
68	8.725-306.0	Filter, Parker Fuel/Oil/H2O (10 Micron), Generic	1
69	8.757-205.0	Hose Barb, 1/4" Barb x 1/4" M-NPTF, 90°	1
70	9.800-020.0	Label, Cold Water Inlet	1
71	9.800-014.0	Label, Intended for Outdoor Use	1
72	9.800-032.0	Label, Motor Overload Reset, Lexan	1
73	9.802-103.0	Bushing, Snap	1
74	9.802-432.0	GFCI, 120V 15A, w/36' 12-3 Cord (511.0)	1
	9.802-431.0	GFCI, 120V 20A, w/36' 12-3 Cord (512.0)	1
	9.802-430.0	GFCI, 240V 1PH 30A, w/36' 10-3 Cord (513.0)	1
75	9.800-015.0	Label, Warning, Service Cord	1
76	9.800-034.0	Label, Clear Lexan, 2-1/4" x 4-1/2"	1
77	9.803-092.0	Fuel Strap Long	2
78	9.803-111.0	Lever, Brake	1
79	9.802-996.0	Bracket, Brake Pad	1
80	9.802-997.0	Linkage, Brake	1
81	9.802-705.0	Bolt, Carriage	4
82	9.802-773.0	Nut, 1/4" ESNA	4
83	9.802-802.0	Washer, 1/4"	12
84	9.802-908.0	Insulation, Blanket, 18" x 52", Fiberglass	1
	8.756-907.0	Insulation, Blanket, 19.5 X 52, Fiberglass (For models HDS 3.5/20 EA)	1
85	9.802-709.0	Bolt, 5/16" x 3/4" NC	4
86	9.802-047.0	Adapter, 1/2" x 1/2" Pipe	1
87	9.802-819.0	Washer, 7/16" x 2 1/2", Zinc, PG Foot	3
88	9.802-710.0	Screw 5/16" x 1" NC	3
89	9.804-016.0	Filter Screen Washer, Garden Hose/30Mesh	1
90	8.757-655.0	Adapter Steel 1/2" JIC x 3/8"	1
	8.757-508.0	Adapter steel 1/2" JIC x 1/2" (For models HDS 3.5/20)	1
91	8.706-241.0	Plug 3/8" square head	1
	8.757-625.0	Plug 1/2" square head (For models HDS 3.5/20)	1

CONTROL PANEL EXPLODED VIEW

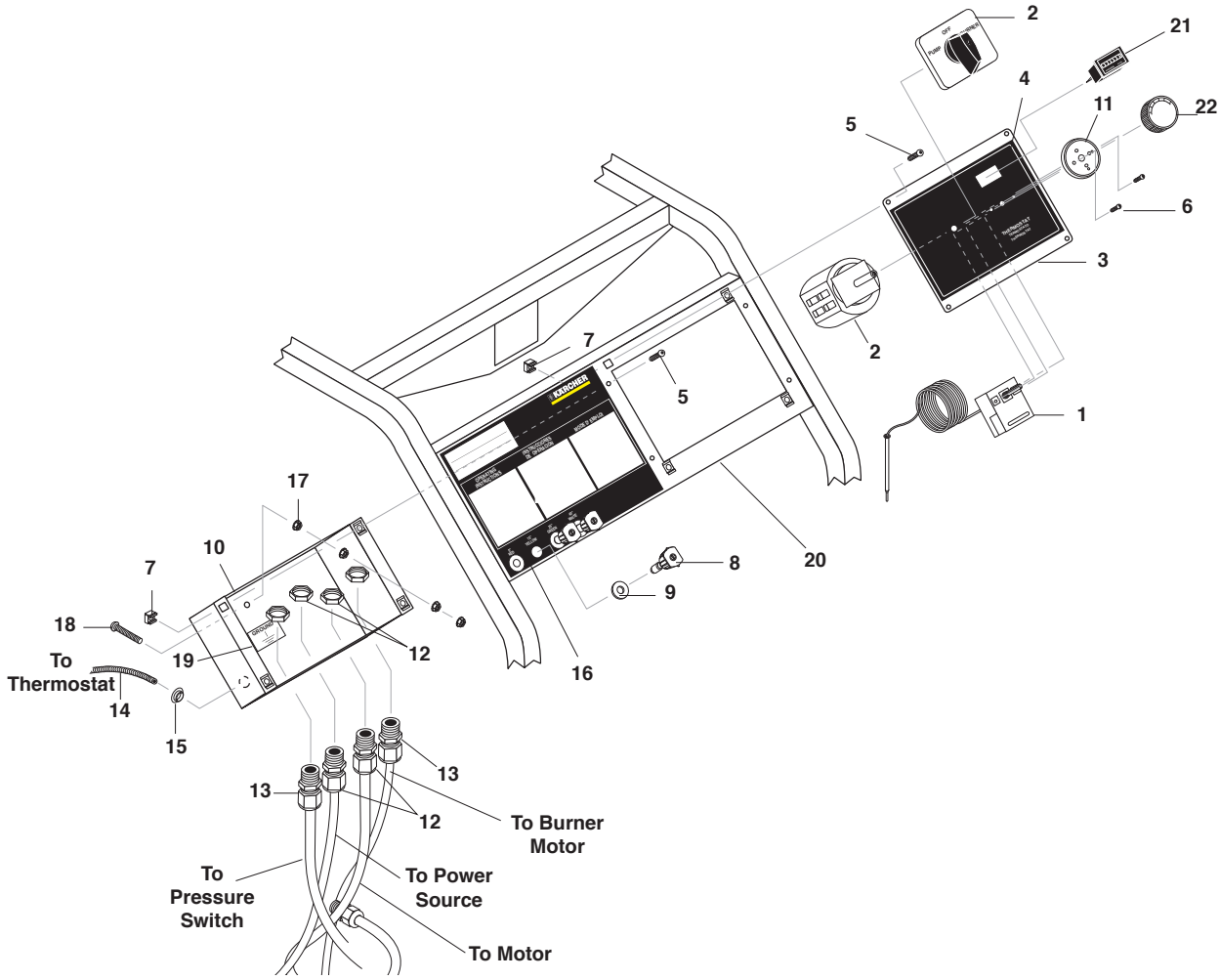

CONTROL PANEL EXPLODED VIEW PARTS LIST

ITEM	PART NO.	DESCRIPTION	QTY
1	8.750-094.0	Thermostat, 150C/302F	1
2	9.802-449.0	Switch, 3 PS, 120V-230V, 1PH	1
3	9.804-519.0	Cover, Electric Box, Black	1
4	9.804-520.0	Label, Electric Box	1
5	9.802-7590	Screw, 10/32" x 1/2" BHSOC Blk	8
6	8.718-779.0	Screw, 4mm x 6mm	4
7	9.802-791.0	Nut, Cage, 10/32" x 16 Gauge	8
8	See Page 17	Nozzle	4
9	9.802-064.0	Grommet, Rubber, Nozzle Holder	4
10	9.804-521.0	Box, Electric, black	1
11	8.712-190.0	Bezel, Plastic Thermostat	1
12	8.752-969.0	Strain Relief, Lt, Str, 1/2 NPT 0.39-0.75ID (511.0, 512.0, 513.0)	2

ITEM	PART NO.	DESCRIPTION	QTY
13	9.802-514.0	Strain Relief, STRT LQ TITE	2
14	9.802-447.0	Conduit, Corr, Tubing, 1/4"	2 ft.
15	9.802-103.0	Bushing, Snap, 5/8"	1
16	9.804-526.0	Label, Control Panel, Kärcher	1
17	9.802-695.0	Nut, 10/32" Keps	4
18	9.802-762.0	Screw, 10/32" x 1-1/4"	1
19	9.800-040.0	Label, Ground	1
20	9.804-524.0	Panel, Control, Black	1
	9.802-754.0	▲Screw, 1/4" x 1/2" HH, NC, Whiz Loc	4
	9.802-775.0	▲Nut, 1/4" Flange	4
21	9.802-283.0	Hour Meter	1
22	8.750-096.0	Knob Thermostat	1

▲Not Shown

HOSE AND SPRAY GUN EXPLODED VIEW

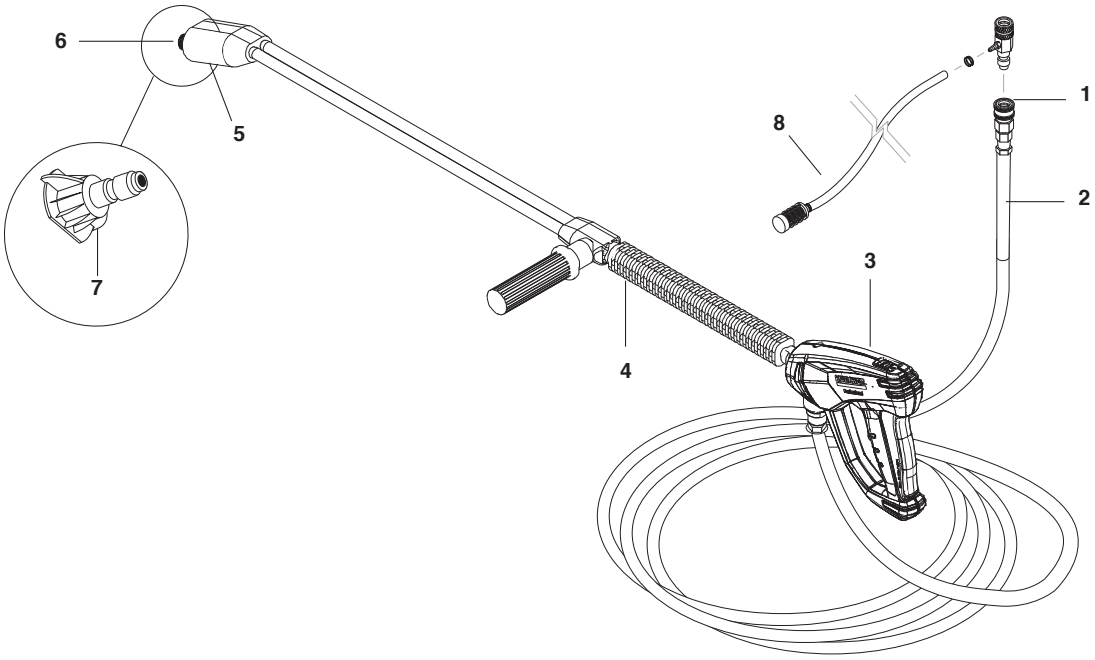

HOSE AND SPRAY GUN PARTS LIST

ITEM	PART NO.	DESCRIPTION	QTY
1	8.707-144.0	Nipple, 3/8", Female, Ssteel	1
	9.802-100.0	▲ Quick Coupler O-Ring LG	1
2	8.925-130.0	Hose, 3/8" X 50' 1W 4000PSI SW/SO/CPL	1
3	4.775-054.0	EASY! Force Advanced KNA	1
	8.710-384.0	Gun, St-1500, 5000 PSI, 10.4 Gpm	1
4	9.802-222.0	Wand, VP Zinc 1/4" w/Coupler, w/Soap Nozzle	1
	9.803-267.0	▲AL Wand Repair Kit, Stainless Seat	1
5	9.802-286.0	Brass Soap Nozzle Only, 1/8"	1
6	9.802-165.0	Coupler, 1/4" Male	1
	9.802-096.0	☐ Quick Coupler O-Ring Sm	1
7	9.802-288.0	Nozzle, SAQMEG 1503, Yellow (512.0)	1
	9.802-289.0	Nozzle SAQMEG 2503, Green (512.0)	1
	9.802-290.0	Nozzle, SAQMEG 4003, White (512.0)	1
	8.712-338.0	Nozzle, SAQMEG 1503.5, Yellow (511.0)	1
	8.712-339.0	Nozzle, SAQMEG 2503.5, Green (511.0)	1
	8.712-340.0	Nozzle, SAQMEG 4003.5, White (511.0)	1
	9.802-300.0	Nozzle, SAQMEG 1505 Yellow (513.0)	1
	9.802-301.0	Nozzle, SAQMEG 2505, Green (513.0)	1
	9.802-302.0	Nozzle, SAQMEG 4005, White (513.0)	1
8	9.802-224.0	Detergent Injector Assy, 2-3 GPM, 0.70" (511.0, 512.0)	1
	8.756-797.0	Injector, Chemical, NON ADJ 0.083(2.1MM) (513.0)	1

▲Not Shown

DOWNSTREAM INJECTOR EXPLODED VIEW

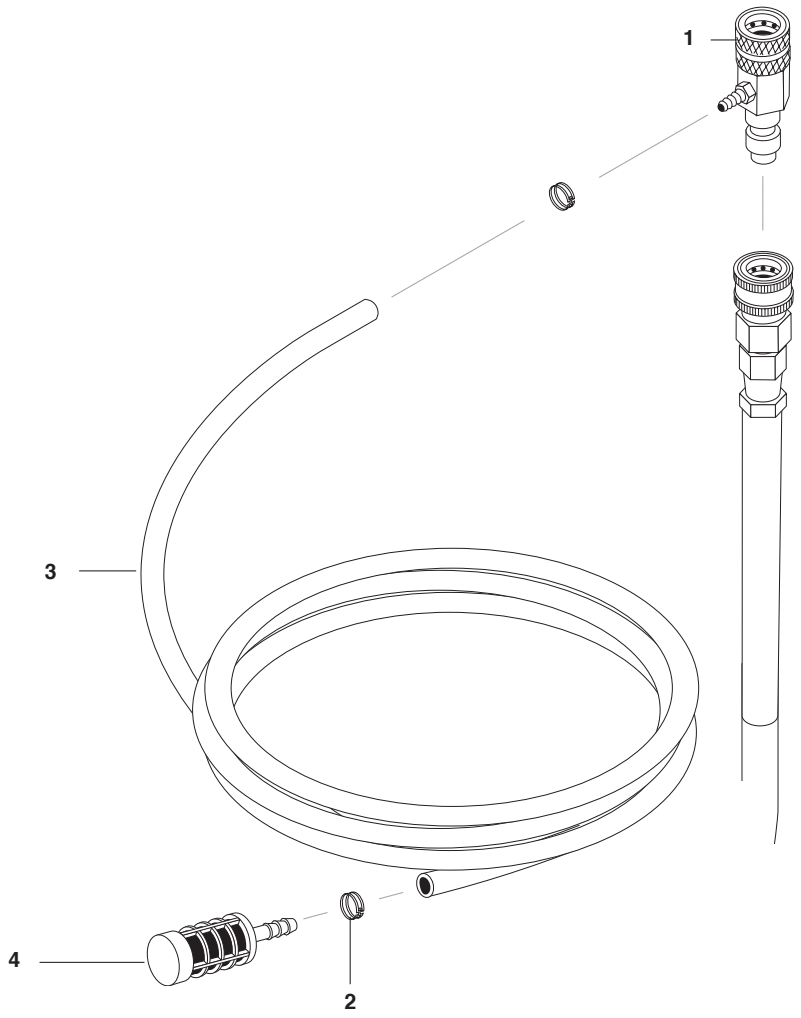

DOWNSTREAM INJECTOR PARTS LIST

ITEM	PART NO.	DESCRIPTION	QTY
1	9.802-215.0	Injector, Detergent, Non-Adjust #2 (511.0, 512.0)	1
	9.802-216.0	Injector, Detergent, Non-Adjust #3 (513.0)	1
2	6.390-126.0	Clamp, Hose, UNI .46 - .54	2
3	9.802-251.0	Tube, 1/4" x 1/2", Clear Vinyl	6 ft.
4	9.802-160.0	Strainer, 1/4" Hose Barb	1

VBT UNLOADER EXPLODED VIEW

8.754-696.0
UNLOADER, VBT BANJO 1/2M 3/8M, 3000PSI (SPARE)

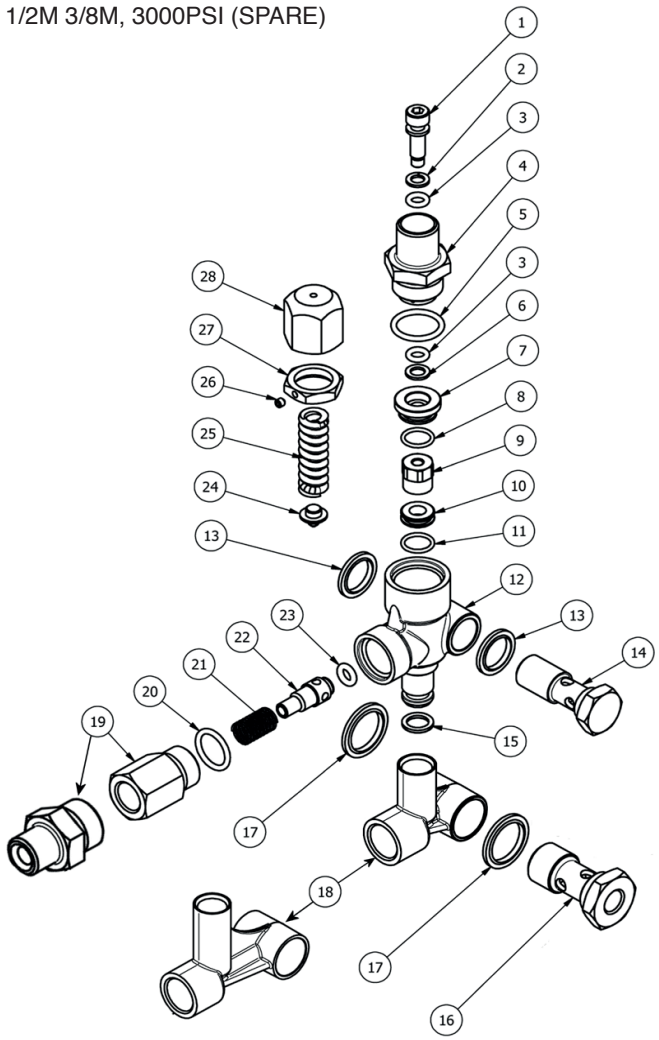

VBT UNLOADER EXPLODED VIEW PARTS LIST

ITEM	PART #	DESCRIPTION	KIT	QTY
1*	8.754-929.0	Stem	C	1
2*	9.803-912.0	Backup Ring	A	1
3*	8.754-930.0	O-ring, Ø2.62 x 6.02	A	2
4	8.730-882.0	Stem Connector		1
5*	9.803-193.0	O-ring, Ø2.62 x 20.24	A	1
6*	9.803-908.0	Backup Ring	A	1
7	9.803-907.0	Guide Bushing		1
8*	9.803-906.0	O-ring, Ø1.78 x 14	A	1
9*	8.754-959.0	Ball SubAssembly	C	1
10*	8.754-933.0	Seat	C	1
11*	8.754-934.0	O-ring, Ø1.78 x 12.42	A,C	1
12	8.754-935.0	Valve Body		1
13	9.802-893.0	Seal Washer 3/8		1
14	9.803-919.0	Banjo Bolt 3/8		1
15*	8.754-936.0	O-ring, Ø2.62 x 10.78	A	1
16	9.803-920.0	Banjo Bolt, 1/2, w/1/4" Port		1

ITEM	PART #	DESCRIPTION	KIT	QTY
17	9.803-914.0	Seal Washer 1/2)		1
18	8.754-937.0	Bypass Manifold		1
19	9.802-892.0	Outlet Connector 3/8 MPT		1
20*	9.803-191.0	O-ring, Ø2.62 X 17.13	A,B	1
21*	8.933-017.0	Poppet Spring	B	1
22*	8.754-939.0	Poppet	B	1
23*	8.754-940.0	O-ring, Ø3 x 6	A,B	1
24*	8.754-961.0	Plate	C	1
25*	8.933-018.0	Spring 1500-4000 PSI	C	1
26	8.933-021.0	Set Screw		1
27	9.803-925.0	Nut		1
28	9.803-926.0	Knob, Brass, Unloader		1

* Included in Kit

Kit A 8.754-941.0 O-Ring Repair Kit
Kit B 8.754-942.0 Outlet Repair Kit
Kit C 8.754-957.0 Stem Repair Kit

KFP SERIES PUMP EXPLODED VIEW

8.929-254.0 KFP2030S

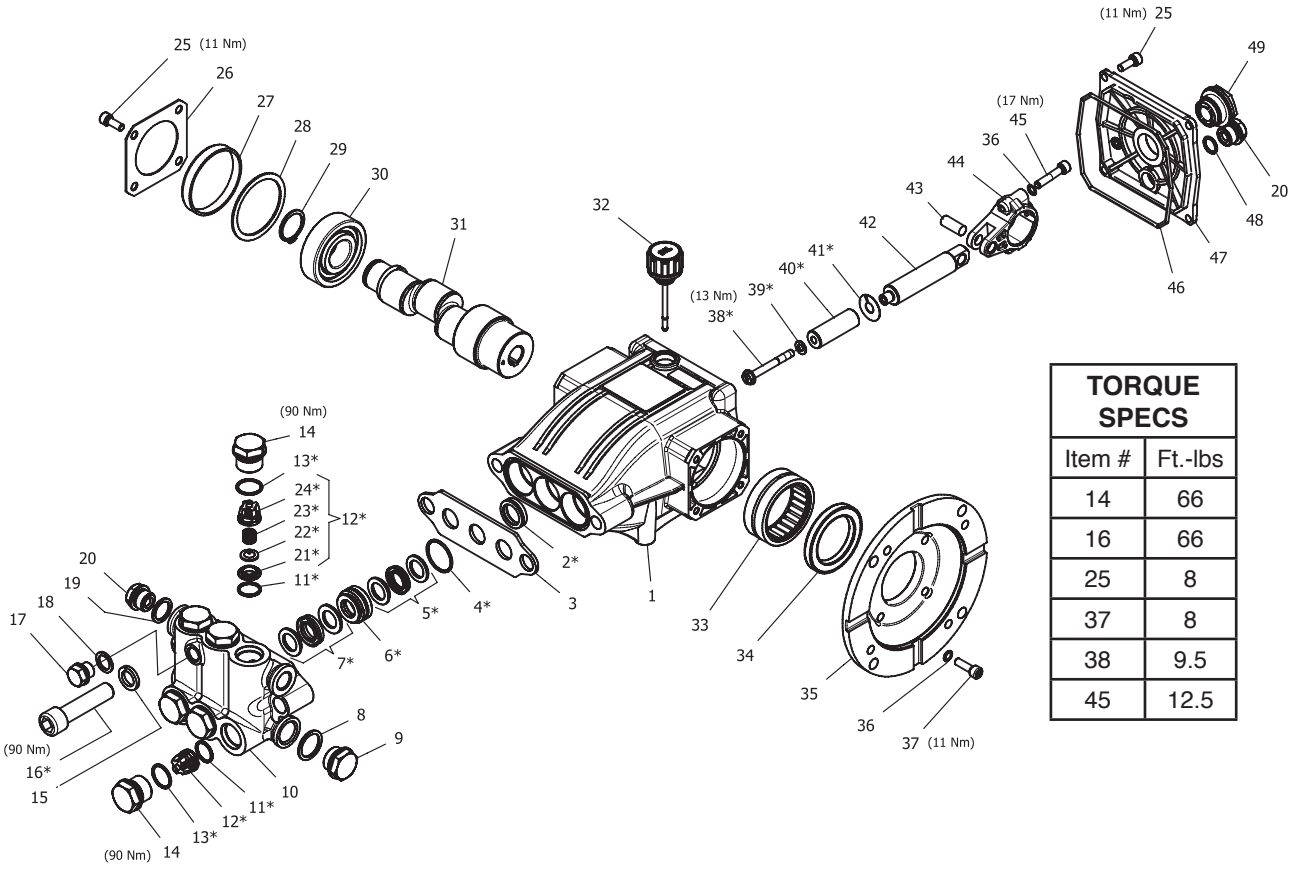

TORQUE SPECS	
Item #	Ft.-lbs
14	66
16	66
25	8
37	8
38	9.5
45	12.5

KFP SERIES PUMP PARTS LIST

ITEM	PART NO.	DESCRIPTION	QTY
1	8.754-841.0	Crankcase	1
2*	See Kits Below	Plunger Oil Seal	1
3	8.758-216.0	Spacer	1
4*	See Kits Below	"O" Ring Ø1.78X26.7	3
5*	See Kits Below	U Seal	3
6*	See Kits Below	Pressure Ring	3
7*	See Kits Below	U-Seal	3
8	9.803-199.0	Washer, Copper G1/2	1
9	9.802-926.0	Plug, Brass G1/2	1
10	8.754-852.0	Manifold (16mm Models)	1
11*	8.717-233.0	"O" Ring Ø1.78x15.6	6
12*	See Kits Below	Valve Assembly	6
13*	9.803-948.0	"O" Ring Ø1.78x18.77	6
14	9.803-949.0	Valve Plug	6
15	8.754-850.0	Washer, Lock	2
16*	8.929-349.0	Bolt Manifold 16MM	2
17	8.754-851.0	Plug, Brass G1/4 (16mm)	1
18	8.754-845.0	Washer, Copper G1/4 (16 mm Models)	1
19	9.803-198.0	Washer, Copper G3/8	1

KFP SERIES PUMP PARTS LIST

ITEM	PART NO.	DESCRIPTION	QTY
20	8.707-262.0	Plug, Brass G3/8	2
21*	See Kits Below	Valve Seat	6
22*	See Kits Below	Valve Plate	6
23*	See Kits Below	Valve Spring	6
24*	See Kits Below	Valve Cage	6
25	9.802-939.0	Screw, Hex M6M 16mm	8
26	8.717-137.0	Bearing Cover	2
27	9.803-954.0	Bearing Seal	1
28	8.754-843.0	Seal Spacer, Crankshaft	1
29	9.802-914.0	Snap Ring, 25 mm	1
30	9.803-955.0	Bearing, Ball	1
31	8.754-836.0	Shaft, 5/8" Hollow	1
32	8.754-219.0	Oil Dipstick	1
33	8.754-840.0	Bearing Needle	1
34	8.754-826.0	Seal, Crankshaft	1
35	8.754-844.0	Flange, Motor	1
36	9.803-218.0	Washer 6mm	10
37	8.752-824.0	Screw, M6 x 20	4
38*	8.754-855.0	Bolt, Plunger	3
39*	8.754-092.0	Washer, Copper	3
40*	8.754-848.0	Plunger, 16mm	3
41*	9.803-962.0	Spacer, Copper	3
42	8.759-032.0	Plunger Rod	3
43	9.803-965.0	Connecting Rod Pin	3
44	9.803-966.0	Connecting Rod	3
45	8.933-020.0	Screw, Connecting Rod	6
46	8.754-847.0	O-ring Ø2.62 X 111.62	1
47	8.754-842.0	Cover, Crankcase	1
48	9.803-906.0	O-ring Ø1.78 X 14	1
49	9.803-202.0	Sight Glass, G3/4	1

* Available in kit (See below)

REPAIR KIT NUMBER	8.759-015.0	8.929-348.0	8.754-858.0	8.754-859.0	9.803-937.0
KIT DESCRIPTION	Plunger Seals 16 mm**	Seal Packing 16 mm**	Plunger 16 mm**	Complete Valve	Plunger Oil Seals
ITEM NUMBERS INCLUDED	4, 5, 7, 16	4, 5, 6, 7, 16	38, 39, 40, 41	11, 12, 13	2
NO. OF CYLINDERS KIT WILL SERVICE	3	1	1	6	3

KFP SERIES PUMP EXPLODED VIEW

8.929-259.0 KFP3530F

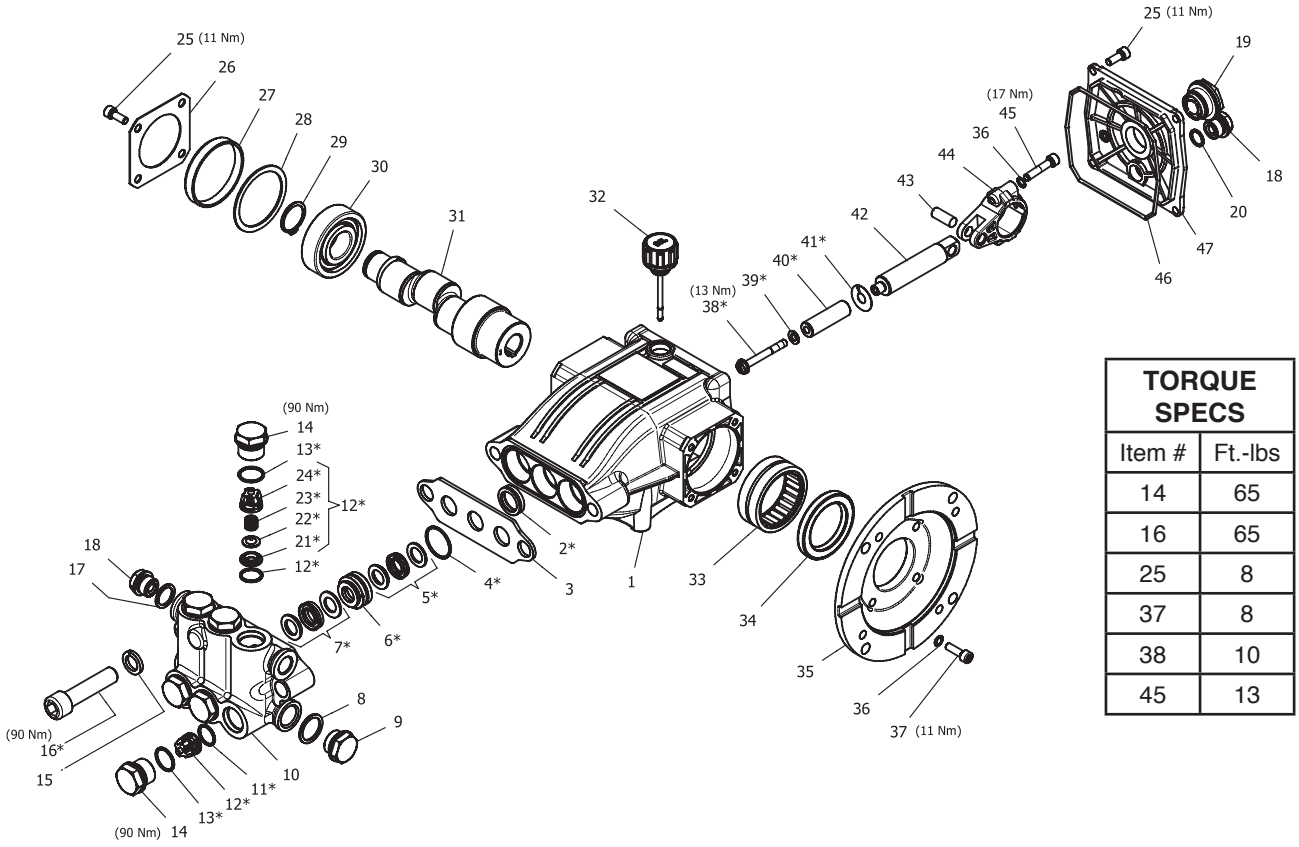

TORQUE SPECS	
Item #	Ft.-lbs
14	65
16	65
25	8
37	8
38	10
45	13

KFP SERIES PUMP EXPLODED VIEW PARTS LIST

ITEM	PART NO.	DESCRIPTION	QTY
1	8.754-841.0	Crankcase	1
2*	9.850-005.0	Plunger Oil Seal	3
3	9.853-555.0	Spacer	1
4*	9.850-780.0	O-ring Ø1.78 X 26.7	3
5*	See Kits Below	"U" Seal kit	3
6*	See Kits Below	Pressure Ring Kit	3
7*	See Kits Below	"U" Seal kit	3
8	9.803-199.0	Washer, Copper G1/2	1
9	8.929-348.0	Plug, Brass G1/2	1
10	8.759-027.0	Manifold 14mm	1
	8.759-028.0	Manifold 16mm	1
11*	8.717-233.0	O-ring Ø1.78 X 15.6	6
12*	See Kits Below	Valve Assembly	6
13*	9.803-948.0	O-ring Ø1.78 X 18.77	6
14	9.803-949.0	Valve Plug	6
15	8.754-850.0	Washer, Lock	2
16*	8.929-349.0	Bolt, Manifoild M14X60	2
17	9.803-198.0	Washer, Copper G3/8	1
18	8.707-262.0	Plug, Brass G3/8	2
19	9.803-202.0	Sight Glass, G3/4	1

ITEM	PART NO.	DESCRIPTION	QTY
20	9.803-906.0	O-ring Ø1.78 X 14	1
21*	See Kits Below	Valve Seat	6
22*	See Kits Below	Valve Plate	6
23*	See Kits Below	Valve Spring	6
24*	See Kits Below	Valve Cage	6
25	9.802-939.0	Screw, M6 X 16	8
26	8.717-137.0	Bearing Cover	1
27	9.803-954.0	Bearing Seal	1
28	8.754-843.0	Seal Spacer, Crankshaft	1
29	9.802-914.0	Snap Ring, 25 mm	1
30	9.803-955.0	Bearing, Ball	1
31	8.754-835.0	Shaft, 5/8" Hollow 2030F	1
	8.754-836.0	Shaft, 5/8" Hollow 2030S	1
	8.754-837.0	Shaft, 5/8" Hollow 2830F	1
	8.754-838.0	Shaft, 5/8" Hollow 2830S	1
	8.754-839.0	Shaft, 5/8" Hollow 3530F	1
32	8.754-219.0	Oil Dipstick	1
33	8.754-840.0	Bearing Needle	1
34	8.754-826.0	Seal, Crankshaft	1
35	8.754-844.0	Flange, Motor	1
36	9.803-210.0	Washer	10

KFP SERIES PUMP EXPLODED VIEW PARTS LIST

ITEM	PART NO.	DESCRIPTION	QTY
37	8.752-824.0	Screw, 6 mm	4
38*	8.754-855.0	Bolt, Plunger	3
39*	8.754-092.0	Spacer, Copper	3
40*	8.754-848.0	Plunger, 16mm (2030S, 2830S)	3
	8.754-849.0	Plunger, 14mm (2030F, 2830F, 3530F)	3
41*	9.803-962.0	Spacer, Copper	3
42	8.759-032.0	Plunger Rod	3
43	9.803-965.0	Connecting Rod Pin	3
44	9.803-966.0	Connecting Rod	3
45	8.933-020.0	Screw, Connecting Rod	6
46	8.754-847.0	O-ring Ø2.62 X 111.62	1
47	8.754-842.0	Cover, Crankcase	1

* Available in kit (See below)

KIT NUMBERS	8.759-031.0	8.759-015.0	8.758-218.0	8.929-348.0	8.754-862.0	8.754-858.0	8.754-859.0	9.803-937.0
KIT DESCRIPTION	Plunger Seals 14 mm	Plunger Seals 16 mm	Seal Packing 14 mm	Seal Packing 16 mm	Plunger 14 mm	Plunger 16 mm	Complete Valve	Plunger Oil Seals
ITEM NUMBERS INCLUDED	4, 5, 7, 16	4, 5, 7, 16	4, 5, 6, 7,16	4, 5, 6, 7,16	38, 39, 40, 41	38, 39, 40, 41	11,12,13	2
NUMBER OF CYLINDERS KIT WILL SERVICE	3	3	3	3	1	1	6	3

BURNER ASSEMBLY EXPLODED VIEW

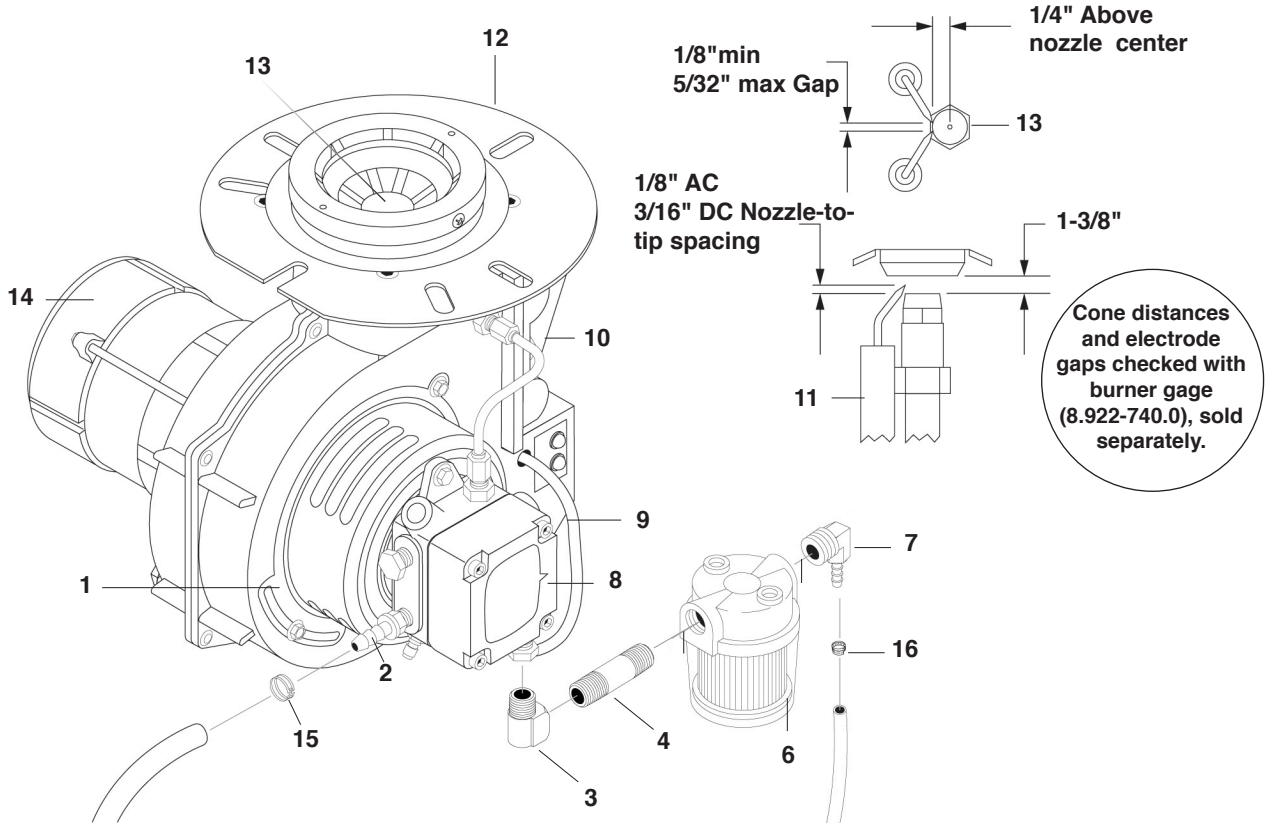

BURNER ASSEMBLY EXPLODED VIEW PARTS LIST

ITEM	PART NO.	DESCRIPTION	QTY
1	8.756-181.0	Burner, MSR 3.75 120V 1T 120V S	1
	8.756-709.0	Burner, MSR, 230V 1T 230V S (For models HDS 3.5/20 EA)	1
2	8.757-199.0	Hose Barb, 1/4" Barb x 1/4" M-NPTF,Brass	1
3	8.757-198.0	Elbow, 1/4" Street, Brass	1
4	8.757-366.0	Nipple, 1/4" X 3", W/SLNT	
5	9.802-525.0	▲Locknut, 1/2"	1
6	8.725-306.0	Fuel filter water separator unit	1
7	8.757-205.0	Nipple, 1/4" X 3", W/SLNT	1
8	8.700-759.0	Fuel Pump Suntec 120V	1
9	9.802-640.0	Fuel Solenoid	1
10	8.919-114.0	Ignitor, 120V Crossfire	1
11	8.750-778.0	Electrode Crossfire	1
12	9.802-655.0	Air Cone, F-6	1
13	8.754-953.0	Fuel Nozzle, 1.75 X 90AZ (For models HDS 3.5/20 EA)	1
	8.756-861.0	Fuel Nozzle, 1.10 X 80 BZ	1
14	8.750-517.0	Motor, 120V Crossfire	1
15	6.390-126.0	Clamp Hose, Uni .46-.54	1

ITEM	PART NO.	DESCRIPTION	QTY
16	8.750-933.0	Band Hose Clamp, Hose Id 1/8" - 5/16"	1
17	9.802-514.0	▲Strain Relief, Lt, Str, 1/2 Npt, .23-.45 D	1
16	8.717-711.0	▲Screen, Fuel Filter	1
17	9.802-649.0	▲Blower Wheel 4.25 x 2.5 Beckett	1
	8.750-520.0	▲Blower Wheel Crossfire	1
18	9.802-648.0	▲Coupling Assy 5/16" Beckett	1
	8.750-543.0	▲Coupling Crossfire	1
19	9.802-646.0	▲Valve Stem Kit Cleancut Pump	1
20	9.802-666.0	▲Screen, Fuel Pump	1

▲Not Shown

WAYNE BURNER EXPLODED VIEW

Replacement Parts

For best performance specify genuine WAYNE replacement parts

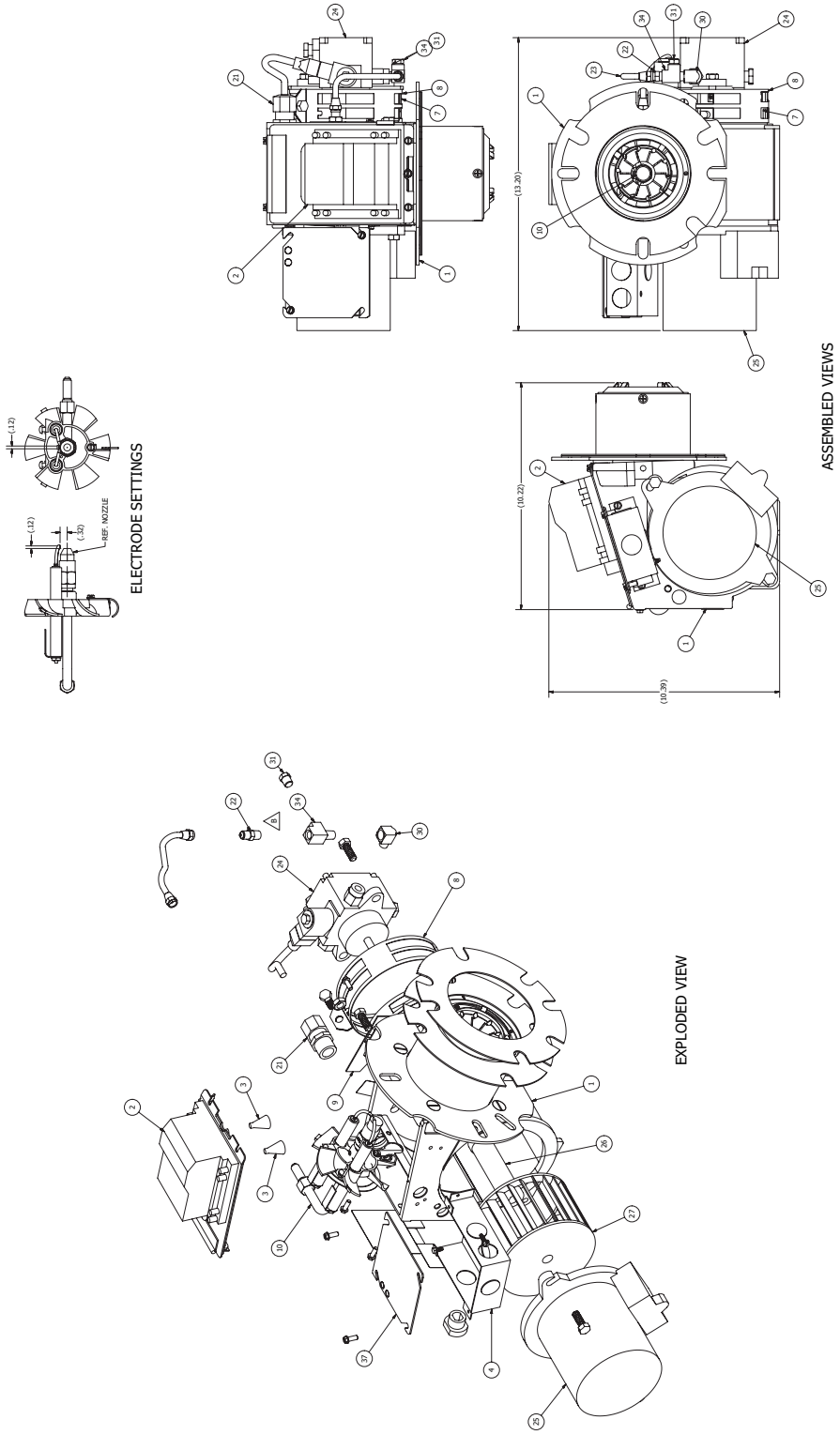

WAYNE BURNER PART LIST

Replacement Parts

For best performance specify genuine WAYNE replacement parts

ITEM	PART NO.	DESCRIPTION	QTY
1	101397-001	Tube/Hous-101392-001/ 5A/3.5"/3"I	1
2	101295-002	Ignitor- D W/M Plate 120V	1
3	100990-001	Spring, Contact	1
4	8.756-740.0	Junction Box, MSR, Black Body	1
7	8.700-707.0	Air Band Inner "M"	1
8	20602-002	Band, Air Outer 8-Hole Mod M	1
9	13392	Plate, Slot Cover	1
10	8.756-298.0	Gun Assembly, Burner-RG/*CST/*1 1/4"BB1	1
19	11141	Decal, UL-Under 3 GPH Non C57	1
21	31954-001	Strain Relief-Low Profile	1
22	14222	Connector, Male-3/16" x 1/8"IPT	1
23	8.700-704.0	Oil Line Assembly 6"	1
24	8.756-290.0	Pump - Combo/W Solenoid 120V	1
25	8.756-292.0	Motor 1/7 HP 120/60	1
26	8.700-822.0	Coupling "M"	1
27	8.700-726.0	Fan - 3.12" x 4.25"D 1/2" Bore	1
30	550053	Fitting, Elbow 90* Street 1/8	1
31	15766	Plug, Pipe HXHD 1/8" NPT	1
34	101274-001	Tee, Street-1/8 X 1/8 Brass	1
35	12407	Stopper, #4 Cork	1
36	8.700-692.0	Flange Gasket (2 Each)	2
37	8.756-739.0	Junction Box, MSR, Black Cover	1

Replacement Parts for model HDS 3.5/20 EA

For best performance specify genuine KNA replacement parts

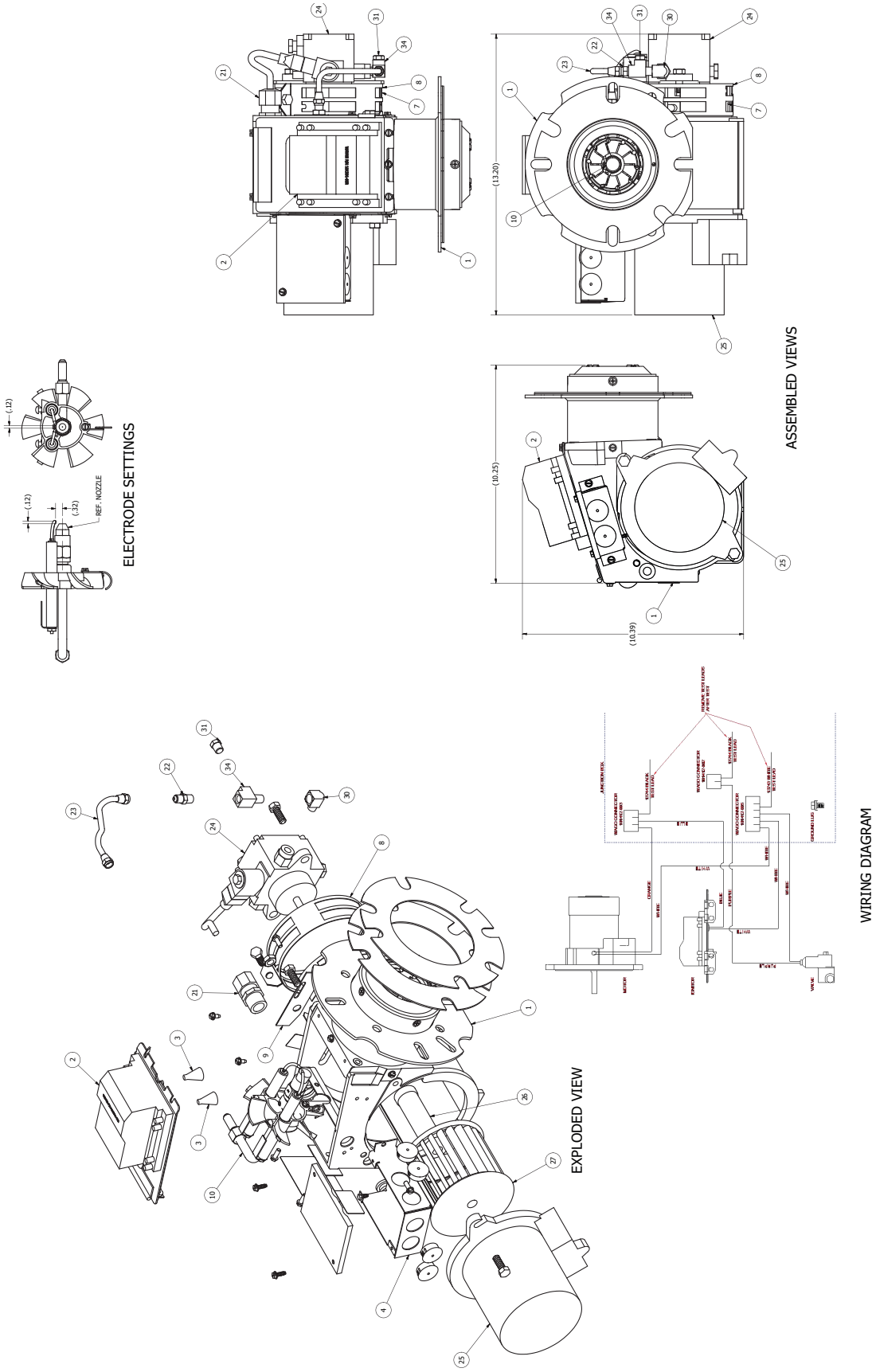

Replacement Parts for model HDS 3.5/20 EA

For best performance specify genuine KNA replacement parts

ITEM	PART NO.	DESCRIPTION	QTY
1	101396-001	Tube/Hous-21922-001/6A/3.75"/.88"I	1
2	101391-002	Ignitor-D W/M Plate 230V	1
3	100990-001	Spring,Contact	2
4	21319-003	J-Box,3X4 (No Knockouts)	1
7	20601-002	Band, Air Inner-Mod M	1
8	20602-002	Band, Air Outer 8-Hole Mod-M	1
9	13392	Plate, Slot Cover	1
10	30537-024	Gun-RG/*CST/*1 1/4"BB	1
21	31954-001	Strain Relief-Low Profile	1
22	14222	Connector, Male-3/16" X 1/8"IPT	1
23	14451	Oil Line ASM.-6"	1
24	101128-010	Pump-S A2VA3006-N753 220V Combo	1
25	24001-001	Motor,1/7 220/230-50/60 PSC	1
26	13424	Coupling-EG1/M "A" Pumps	1
27	21427	FAN-3.44"W X 4.25"D M 1/2" BOR	1
30	550053	Fitting,Elbow 90* Street 1/8	1
31	15766	Plug, PIPE HXHD 1/8" NPT	1
34	101274-001	TEE,Street-1/8 X 1/8 Brass	1
36	12484	Gasket, Flange-STD Large	2

TROUBLESHOOTING

PROBLEM	POSSIBLE CAUSE	SOLUTION
LOW OPERATING PRESSURE	Faulty pressure gauge	Install new gauge.
	Insufficient water supply	Use larger garden hose; clean filter washer at water inlet.
	Old, worn or incorrect spray nozzle	Match nozzle number to machine and/or replace with new nozzle.
	Plumbing or hose leak	Check plumbing system for leaks. Re-tape leaks with teflon tape.
	Faulty or mis-adjusted unloader valve (where applicable)	Adjust unloader for proper pressure. Install repair kit when needed.
	Worn packing in pump	Install new packing kit.
	Fold or dirty inlet or discharge valves in pump	Clean inlet or discharge valves.
	Worn inlet or discharge valves	Replace with valve kit.
DETERGENT NOT DRAWING	Air leak	Tighten all clamps. Check detergent lines for holes.
	Valve in the injector head may be blocked, dirty, or damaged	Clean or replace valve in injector.
	Filler screen on detergent suction hose plugged	Clean or replace.
	Dried up detergent plugging metering valve	Disassemble and clean thoroughly.
	High viscosity of detergent	Dilute detergent to specifications.
	Hole in detergent line(s).	Repair hole.
	Low detergent level	Add detergent if needed.
	Discharge water temperature above 180° F	Lower discharge water temperature.
PUMP RUNNING NORMALLY BUT PRESSURE LOW ON INSTALLATION	Pump sucking air	Check water supply and possibility of air
	Valves sticking	Check and clean or replace if necessary.
	Unloader valve seat faulty	Check and replace if necessary
	Nozzle incorrectly sized	Check and replace if necessary (see serial plate for proper size).
	Worn piston packing	Check and replace if necessary.
FLUCTUATING PRESSURE	Valves worn	Check and replace if necessary.
	Blockage in valve	Check and replace if necessary.
	Pump sucking air	Check water supply and air see page at joints in suction line.
	Worn piston packing	Check and replace if necessary.
PUMP NOISY	Air in suction line	Check water supply and connections on suction line.
	Broken or weak inlet or discharge valve springs	Check and replace if necessary.
	Excessive matter in valves	Check and clean if necessary.
	Worn bearings	Check and replace if necessary.
LOW WATER TEMPERATURE	Improper fuel or water in fuel	Drain fuel tank and replace with proper fuel.
	Low fuel pressure	Increase fuel pressure.
	Weak fuel pump	Check fuel pump temperature. Replace pump if needed.
	Fuel filter partially clogged	Replace as needed.
	Soot build up on coils	Clean coils with soot remover.
	Lime build up on coils	Clean inside of coils using coil cleaner.
	Improper burner nozzle	Call technical service for proper size.
WATER TEMPERATURE TOO HOT	Incoming water to machine warm or hot	Lower incoming water temperature.
	Fuel pump pressure too high	Lower fuel pressure.
	Fuel pump defective	Replace fuel pump.
	Detergent line sucking air	Tighten all clamps. Check detergent line for holes.
	Defective high limit switch (thermostat)	Replace.
	Insufficient water supplied	Check GPM to machine.
	Restricted water flow	Check nozzle for obstruction, proper size.

PREVENTATIVE MAINTENANCE

This pressure washer was produced with the best available materials and quality craftsmanship. However, you as the owner have certain responsibilities for the correct care of the equipment. Attention to regular preventative maintenance procedures will assist in preserving the performance of your equipment. Contact your local pressure washer dealer for maintenance. Regular preventative maintenance will add many hours to the life of your pressure washer. Perform maintenance more often under severe conditions.

MAINTENANCE SCHEDULE		
Replace Fuel Lines		Annually
Pump Oil	Inspect	Daily inspect the oil level
(Non foaming) SAE 10W-40	Change	After first 50 hours, then every 500 hours or annually
Clean Burner Filter		Monthly (more often if fuel quality is poor)
Remove Burner Soot		Annually
Burner Adjustment/Cleaning		Annually
Descale Coil		Annually (more often if required)
Replace High Pressure Nozzle		Every 6 months
Replace Quick Connects		Annually
Clean Water Screen/Filter		Weekly
Clean Float/Supply Tank		Every 6 months
Replace HP Hose		Annually if there is any sign of wear
Grease Motor		Every 10,000 hours
Replace Burner Nozzle		Annually

OIL CHANGE RECORD

Date Oil Changed Month/Day/Year	Estimated Operating Hours Since Last Oil Change

Date Oil Changed Month/Day/Year	Estimated Operating Hours Since Last Oil Change

THANK YOU!

MERCI!¡GRACIAS!DANKE!

Register your product and benefit from many advantages.

Enregistrez votre produit et bénéficiez de nombreux avantages.

Registre su producto y aproveche de muchas ventajas.

Registrieren Sie Ihr Prudukt und Sie von vielen Vorteilen.

www.kaercher.com/welcome ★★★★★

Rate your product and tell us your opinion.

Évaluez votre produit et donnez-nous votre opinion.

Reseña su producto y díganos su opinión.

Bewerten Sie Ihr Produkt und sagen Sie uns Ihre Meinung.

www.kaercher.com/dealersearch

Kärcher North America
6398 N Kärcher Way
Aurora, CO 80019
Phone: +1 800 444-7654