KÄRCHER

makes a difference

FC 3 Cordless
FC 3 Cordless Premium

Operating Instructions

Please read the operating instructions carefully before using the unit.

59687970 (05/19)

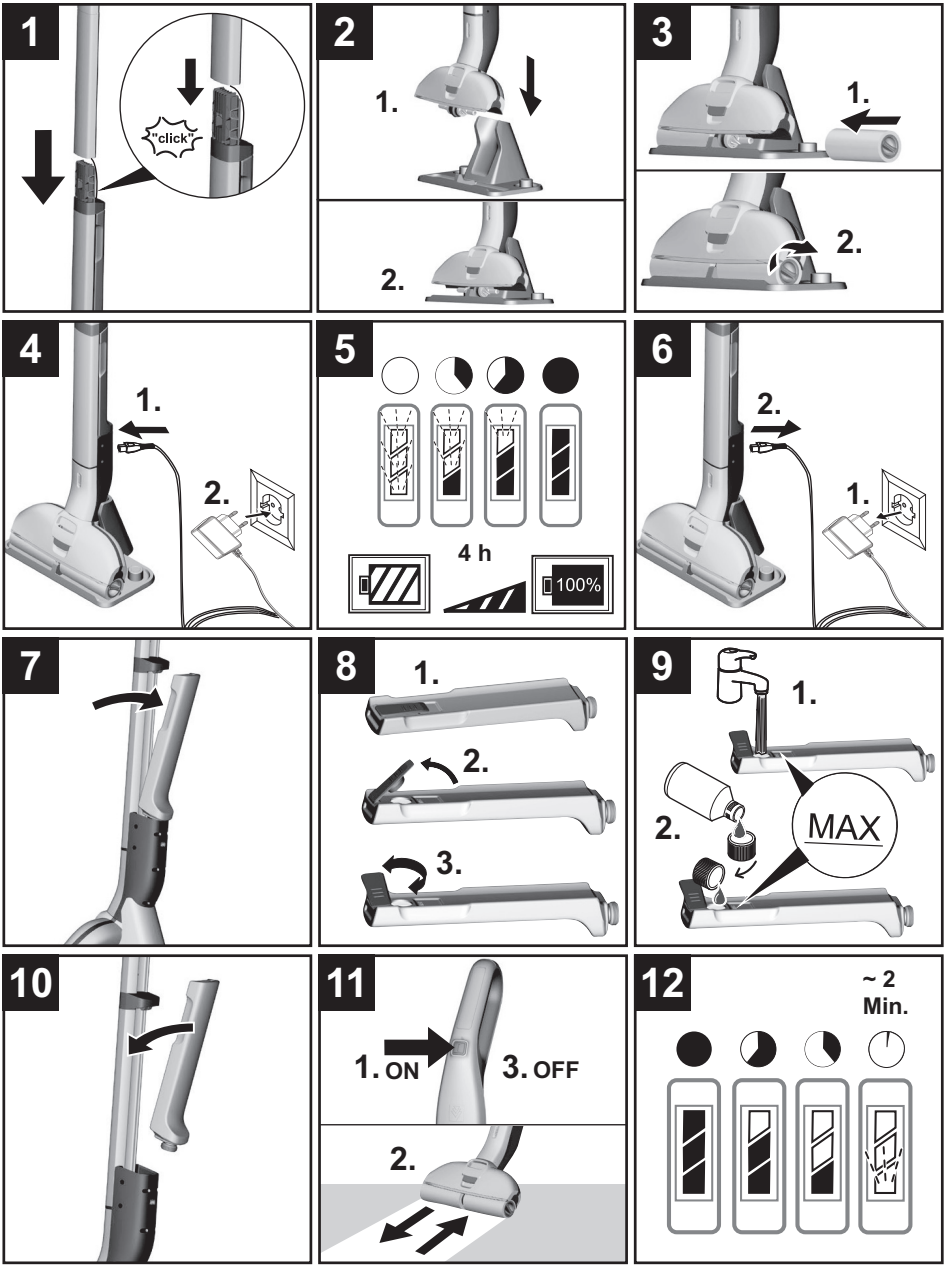
1
"click"
2
1.
2.
3
1.
2.
4
1.
2.
5
4 h
100%
6
2.
1.
7
8
1.
2.
3.
9
1.
2.
MAX
10
11
1. ON
3. OFF
2.
12
~ 2
Min.

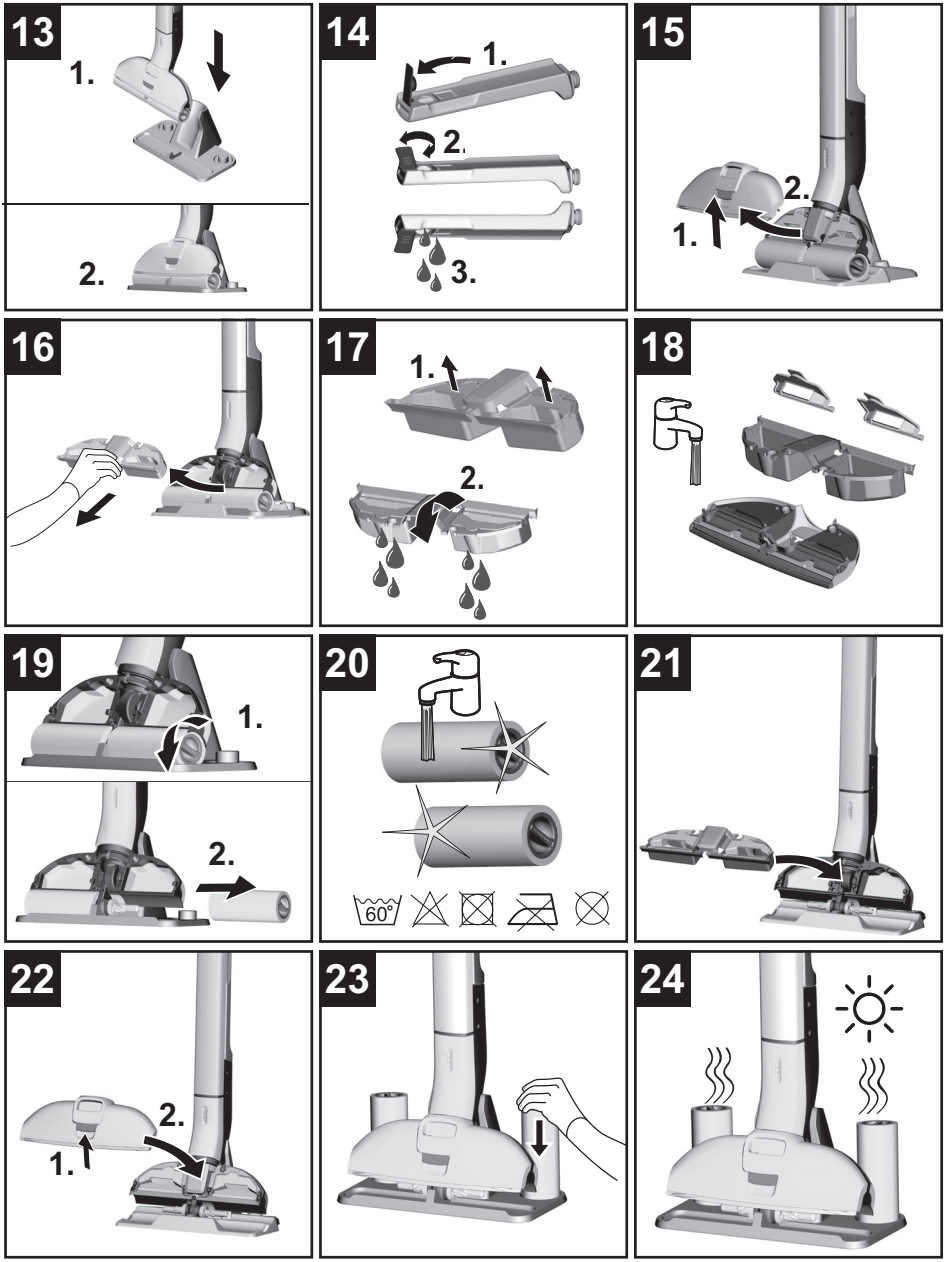
13
1.
2.
14
1.
2.
3.
15
2.
1.
16
17
1.
2.
18
19
1.
2.
20
60°
21
22
2.
1.
23
24

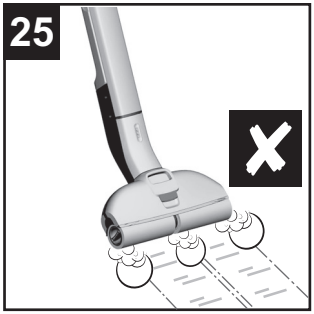
25

26
1.
FoamStop:
Shake well
2.
1/2 x
(≙1 ml)

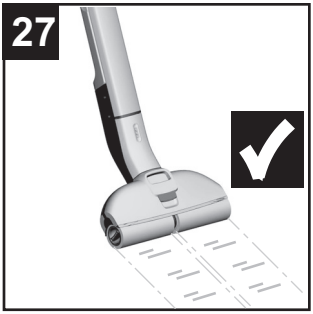
27

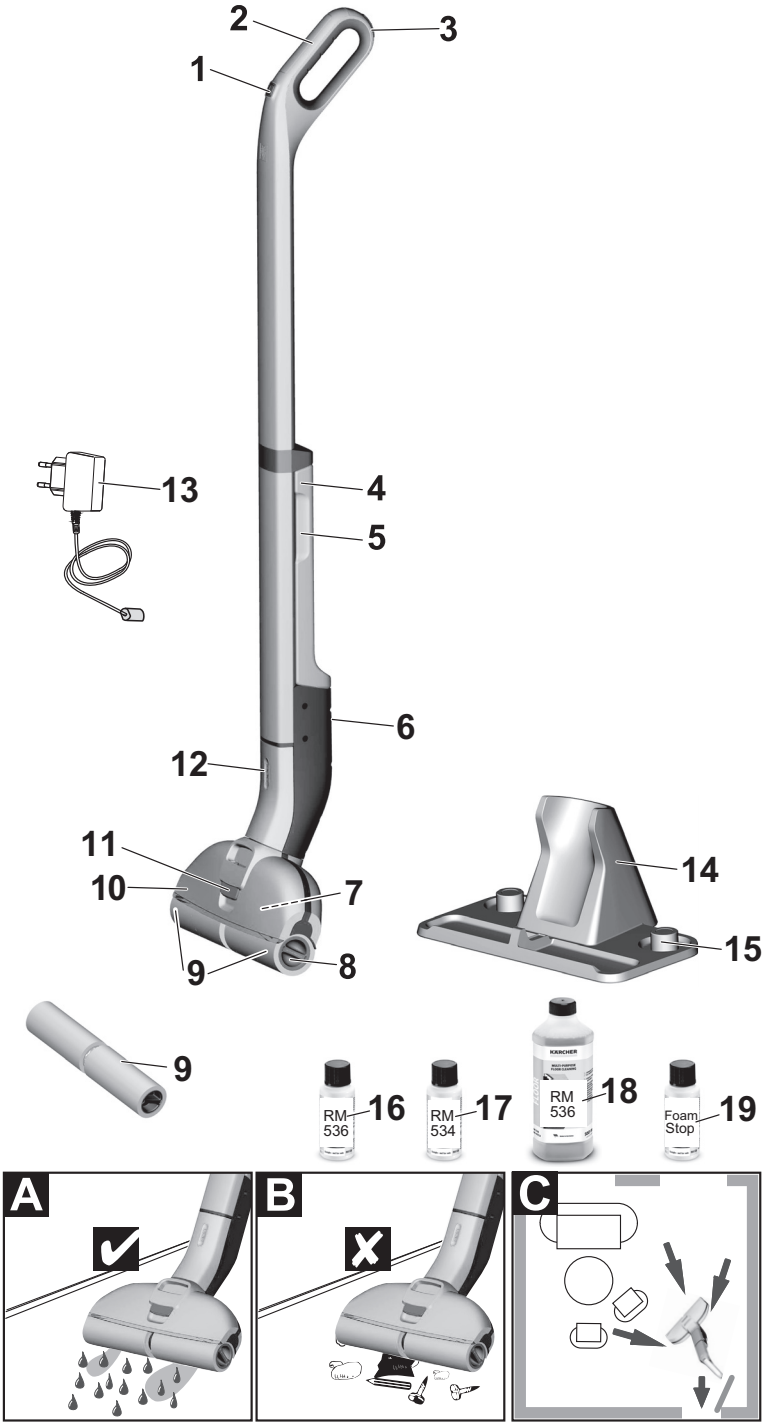
2
3
1
13
4
5
6
12
11
10
7
9
8
14
15
9
RM 536
16
RM 534
17
KÄRCHER
RM 536
18
Foam Stop
19
A
B
C

Contents

General information	EN	6
Safety instructions	EN	6
Description of the Appliance	EN	10
Assembly	EN	10
Commissioning	EN	10
Operation	EN	10
Care and maintenance	EN	11
Troubleshooting	EN	12
Technical specifications	EN	14
Customer service	EN	14

General information

Before using your appliance for the first time, read these original operating instructions, act in compliance with them, and keep them for later use or for subsequent owners.

Proper use

Use the floor cleaner exclusively for cleaning hard floors in your private household and only on waterproof hard floors.
Do not clean water-sensitive floor coverings such as untreated cork floors (the moisture could penetrate and damage the floor).
The device is suitable for cleaning PVC, linoleum, tiled, stone, oiled and waxed parquet, laminate and all water-resistant floor coverings.

Environmental protection

The packaging material can be recycled. Please do not place the packaging into the ordinary refuse for disposal, but arrange for the proper recycling.

Old appliance contain valuable recyclable materials and substances that must not be released into the environment. Thus, the appliance and the accumulator contained must not be disposed of via the domestic waste. The disposal can take place via locally available return and collection systems free of charge.

Notes about the ingredients (REACH)
You will find current information about the ingredients at:
www.kaercher.com/REACH

Scope of delivery

The scope of delivery of your appliance is illustrated on the packaging. Check the contents of the appliance for completeness when unpacking.
In the event of missing accessories or any transport damage, please contact your dealer.

Spare parts

Only use original accessories and spare parts, they ensure the safe and trouble-free operation of the device. For information about accessories and spare parts, please visit www.kaercher.com.

Warranty

The warranty terms published by the relevant sales company are applicable in each country. We will repair potential failures of your appliance within the warranty period free of charge, provided that such failure is caused by faulty material or defects in manufacturing. In the event of a warranty claim please contact your dealer or the nearest authorized Customer Service centre. Please submit the proof of purchase.
(See address on the reverse)

Symbols on the machine

ATTENTION
Please adhere to the following procedure for filling the fresh water tank during cleaning work:

1.
First empty the waste water tank.

2.
Then fill the fresh water tank.

Safety instructions

– *Apart from the notes contained herein the general safety provisions and rules for the prevention of accidents of the legislator must be observed.*
– *Warnings and notes that are attached on the appliance provide important notes for the safe operation.*

Hazard levels

⚠ DANGER
Pointer to immediate danger, which leads to severe injuries or death.

⚠ WARNING
Pointer to a possibly dangerous situation, which can lead to severe injuries or death.

⚠ ***CAUTION***
Pointer to a possibly dangerous situation, which can lead to minor injuries.

ATTENTION
Pointer to a possibly dangerous situation, which can lead to property damage.

Electric components

⚠ ***DANGER***

- *Do not immerse the device into water.*
- *Check the faultless condition of the appliance and the accessories before using it. Otherwise, the appliance must not be used.*
- *Immediately replace the charger with the charging cable in case of visible damage.*
- *Turn off the appliance and remove the mains plug prior to any care and maintenance work.*
- *Repair works may only be performed by the authorized customer service.*
- *The appliance contains electrical components - do not clean under running water.*
- *Do not insert conductive objects (such as screwdrivers or the like) into the charging socket.*
- *Do not touch contacts or wires.*
- *The voltage indicated on the type plate must correspond to the supply voltage.*
- *Do not scrape the power cord across sharp edges and ensure that it does not get pressed.*

⚠ ***WARNING***

- *The appliance may only be connected to an electric supply that has been installed by an electrician in accordance with IEC 60364.*
- *The appliance may only be connected to alternating current. The voltage must correspond with the type plate of the appliance.*
- *For safety reasons, we recommend that you operate the appliance only via a earth-leakage circuit breaker (max. 30 mA).*

Charger

⚠ ***DANGER***
Risk of electric shock.

- *Never touch the mains plug and the socket with wet hands.*
- *Do not use the charger if dirty or wet.*
- *Do not operate the charger in explosive environment.*
- *Do not carry the charger by holding the mains cable.*
- *Store and use the charger in dry rooms only.*
- *Protect the mains cable against heat, sharp edges, oil and moving parts of the machine.*
- *Avoid using extension wires with multiple sockets and si-*

multaneous operation of multiple devices.

- *Do not pull the plug from the socket by pulling the mains cable.*
- *Do not cover the charger and keep the air vents of the charger open.*
- *Do not open the charger. Get repairs done only by authorised experts.*
- *Use the charger only to charge approved battery packs.*
- *Immediately replace the charger with the charging cable in case of visible damage.*

Battery

⚠ ***DANGER***

Risk of electric shock.

- *Do not expose the battery to direct sunlight, heat or fire.*

⚠ ***WARNING***

- *Charge the battery with the enclosed original charger or a charger approved by KÄRCHER only.*

Use the following adaptor:

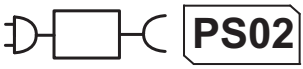

- ***Do not open the battery**, as there is a risk of an electrical shock; also, irritating or caustic vapors can escape.*

Safe handling

⚠ ***DANGER***

- *The user must use the appliance as intended. The person must consider the local conditions and must pay attention to other persons in the vicinity when working with the appliance.*
- *The appliance may not be operated in explosive atmospheres.*
- *If the appliance is used in hazardous areas the corresponding safety provisions must be observed.*
- *Do not use the appliance if it fell down, is visibly damaged or leaking.*
- *Keep packaging films away from children, there is a risk of suffocation!*

⚠ ***WARNING***

- *The appliance must not be operated by children or persons who have not been instructed accordingly.*
- *This appliance is not intended for use by persons with limited physical, sensory or mental capacities or lacking experience and/or skills, unless such persons are accompanied and supervised by a person in charge of their safety or they have received precise instructions on the use of this appliance and have understood the resulting risks.*
- *Children must not play with this appliance.*
- *Supervise children to prevent them from playing with the appliance.*
- *Keep appliance out of reach of children as long as it is*

switched on or hasn't cooled down.

- *Cleaning and user maintenance must not be performed by children without supervision.*
- *Operate or store the appliance only in accordance with the description or illustration!*

⚠ ***CAUTION***

- *Create stability for the appliance prior to any work on or with the appliance to prevent accidents or damage.*
- *Never fill solvents, solvent-containing liquids or undiluted acids (e.g. detergents, petrol, paint thinner, and acetone) into the water reservoir as these substances corrode the materials used in the appliance.*
- *Never leave the appliance unattended as long as it is in operation.*
- *Keep parts of the body (e.g. hair, fingers) away from the rotating cleaning rollers.*
- *Protect your hands when cleaning the floor head due to a danger of injury from sharp objects (e.g. splinters).*
- *Keep connection cable away from heat, sharp edges, oil and moving parts.*

ATTENTION

- *Only switch on the appliance when the fresh water tank and waste water tank are fitted.*
- *The device may not be used for vacuuming sharp objects or large objects (e.g. glass shards, gravel, toy parts).*
- *Do not fill the fresh water container with vinegar, decalcification agents, essential oils or similar substances. Also take care to ensure that these substances are not vacuumed.*
- *Only use this appliance on hard floors with waterproof coatings (e. g. varnished parquet, enamelled tiles, Linoleum).*
- *Do not use the appliance for cleaning of carpets or carpeted floors.*
- *Do not use the appliance over the floor grilles of convector heaters. The appliance is not able to take in the water discharged when used above grilles.*
- *In case of longer breaks in operation and after use, switch off the device at the main switch / device switch and pull the charger's mains plug.*
- *Do not operate the appliance at temperatures below 0 °C.*
- *Protect the unit from rain. Do not store outside.*

Description of the Appliance

1 ON/OFF switch
2 Handle
3 Wall anti-slip handle
4 Fresh water tank
5 Fresh water tank recessed grip
6 Charging socket
7 Waste water tank
8 Recessed grip cleaning roller
9 Cleaning rollers
10 Floor head cover
11 Floor head cover lock
12 Battery indicator
13 Charger with charging cable
14 Parking station
15 Roller storage

16	* Detergent	RM 536	30 ml
17	** Detergent	RM 534	30 ml
18	** Detergent	RM 536	500 ml
19	Defoamer	FoamStop	30 ml
9	** Cleaning rollers	2x	

* FC 3 Cordless
** FC 3 Cordless Premium

Assembly

Illustration 1
➔ Insert handle into the basic unit as far as it goes until it engages audibly.
The handle must sit snugly into the appliance.

Commissioning

Illustration 2
➔ Place the device in the parking station for safe storage.

Installing the rollers

Illustration 3
➔ Screw the cleaning rollers onto the threaded rod up to the mechanical stop.
➔ Pay attention to the colour-codes on the inside of the roller and roller holder on the appliance (e.g. blue should match up with blue).
➔ After the installation, check to ensure that the cleaning rollers sit snugly.

Charging process

Illustration 4
➔ Plug the charging cable of the charger into the charging socket on the device.
➔ Plug the mains plug of the charger into a power outlet.
Illustration 5
- The LED indicator lights display the battery's current charging state.
- All 3 LED indicator lights flash from bottom to top when charging a completely empty battery.
- The lowermost LED lights up continuously when the battery is 1/3 charged, the two upper LEDs continue to flash.
- When the battery is 2/3 charged, the two lower LEDs light up continuously, the uppermost LED continues to flash.
- After the battery has been fully charged, the 3 LED indicator lights will continue to light constantly for 60 minutes. After this time, the LED indicator lights go out.

Illustration 6
➔ Once the battery is charged, pull the mains plug out of the socket and the charging cable out of the charging socket.

Fill fresh water reservoir

Illustration 2
➔ Place the device in the parking station.
Illustration 7
➔ Grasp the fresh water tank by the recessed grip and remove it from the device.

Illustration 8
➔ Open the tank cap and turn it to the side.
Illustration 9
➔ Fill the fresh water tank with cold or lukewarm tap water.
➔ KÄRCHER detergents/care agents can also be added to the fresh water tank as required.*
➔ Do not exceed the "MAX" marking when filling.
➔ Close tank lock.
Illustration 10
➔ Insert the fresh water container into the appliance.
➔ The fresh water tank must sit snugly into the appliance.

ATTENTION
**Follow the recommended dosage instructions on the detergent/care agent.*

Operation

General information on the operation

ATTENTION
Illustration A
The device can only vacuum dried dirt and liquids (max. 140 ml).
Illustration B
Brush or vacuum the floor before starting work. This removes dirt and loose particles from the floor before the wet cleaning commences.
Before use, check the floor for water consistency at suspect areas. Do not clean water-sensitive coatings, such as untreated cork floors (moisture ingress is possible which may damage the floor).
Illustration C
To avoid fresh footprints on the freshly-wiped floor, work backwards towards the door.
➔ Clean the floor by moving the appliance back and forth at a similar speed as if you were vacuum cleaning.
➔ If the floor is especially dirty, let the appliance glide slowly across the floor.
Pressure does not need to be exerted on the device.
➔ For scope of delivery of the roller pads in grey and yellow: Both roller pads have the same functionality, they can be used for different areas of application (colour distinction, e.g. for kitchen and bathroom).

Start working

ATTENTION

After switching on the appliance, the cleaning rollers will begin to rotate. Hold the handle tight to prevent the appliance from moving forwards by itself.

Make sure the fresh water tank is filled with water and the waste water tank is fitted in the appliance.

Illustration 11

➔ To switch on the appliance press the on/off switch.

➔ Move the unit back and forth several times until the rollers are sufficiently moistened.

Battery service life

Illustration 12

– 3 LEDs illuminated - 3/3 battery run time (full run time).

– 2 LEDs illuminated - 2/3 battery run time.

– 1 LEDs illuminated - 1/3 battery run time.

■ The lowermost LED starts to flash approx. 2 minutes before the battery has to be charged.

■ The last LED flashes quicker for 60 seconds when the battery is empty and the device has switched off.

Refill detergent

ATTENTION

Before filling the fresh water tank, please empty the waste water tank. In this way you can avoid overflowing of the waste water tank.

See chapter "Filling the fresh water tank".

See Chapter "Emptying the waste water tank".

Emptying the waste Water tank

Illustration 2

➔ Place the device in the parking station.

Illustration 15

➔ Actuate the floor head cover latch.

➔ Remove the floor head cover.

Illustration 16

➔ Remove the waste water tank from the floor head.

Illustration 17

➔ Fold the flaps over the two waste water tank chambers.

➔ Empty the waste water tank.

Illustration 18

➔ Clean the floor head cover and waste water tank with tap water, depending on the degree of soiling.

➔ The flaps of the two waste water tank chambers can be removed and cleaned separately.

➔ Re-insert and close the flaps of the two waste water tank chambers.

Illustration 21

➔ Insert the waste water tank into the floor head.

Illustration 22

➔ Actuate the latch on the floor head cover, fit the cover onto the floor head and then release the latch.

➔ The waste water tank and floor head cover must sit firmly in and on the device.

Interrupting operation

ATTENTION

To prevent damage to sensitive floors through wet rollers, we recommend placing the device in the parking station during longer work breaks.

Illustration 11

➔ Switch off the appliance; press the on/off button to do so.

Illustration 2

➔ Place the device in the parking station.

Turning Off the Appliance

Illustration 11

➔ Switch off the appliance; press the on/off button to do so.

Illustration 2

➔ Place the device in the parking station.

ATTENTION

Clean the device after completing the work.

Illustration 14

➔ Drain any water remaining in the fresh water tank.

Figure 15 to 24

➔ Clean the waste water tank, floor head cover and cleaning rollers.
See chapter "Cleaning the waste water tank".
See chapter "Cleaning the floor head".
See chapter "Cleaning the rollers".

Storing the Appliance

ATTENTION

To prevent odours developing, the fresh water and waste water tank must be completely emptied prior to storing the appliance.

Allow wet rollers to dry in the air (e.g. on the parking station), do not place wet rollers in closed cupboards to dry.

Illustration 2

➔ Place the device in the parking station.

Illustration 24

➔ Place the wet rollers on the parking station to dry.

➔ Store the appliance in a dry room.

Care and maintenance

Clean the waste water tank

ATTENTION

The waste water tank must be cleaned regularly to ensure that dirt does not accumulate in the tank.

ATTENTION

Do not clean the floor head cover in a dishwasher: The basic function of the device can be impaired if the floor head cover is distorted by the dishwasher and the wiper edge no longer presses correctly onto the rollers. This will produce a worse cleaning result.

Illustration 11

➔ Switch off the appliance; press the on/off button to do so.

Illustration 2

➔ Place the device in the parking station.

Figure 15 to 18

➔ Remove the waste water tank from the appliance.
See Chapter "Emptying the waste water tank".

➔ Clean the floor head cover, waste water tank and waste water tank flaps with tap water.

➔ The flaps of the two waste water tank chambers can be removed and cleaned separately.

➔ Alternatively, the waste water tank and waste water tank flaps can be cleaned in a dishwasher.

Note

The rubber inlays of the waste water tank flaps can become sticky when washed in a dishwasher. This does not affect their sealing ability.

Figure 19 to 20

➔ Also clean the rollers if the device is not going to be used further.
See chapter "Cleaning the rollers".

Figure 21 to 22

➔ After cleaning, fit the waste water tank with flaps and floor head cover back into the device.

Cleaning the floor head

ATTENTION

Clean the floor head if dirty.

ATTENTION

Do not clean the floor head cover in a dishwasher: The basic function of the device can be impaired if the floor head cover is distorted by the dishwasher and the wiper edge no longer presses correctly onto the rollers. This will produce a worse cleaning result.

Illustration 11

➔ Switch off the appliance; press the on/off button to do so.

Illustration 2

➔ Place the device in the parking station.

Illustration 15

➔ Actuate the floor head cover latch.

➔ Remove the floor head cover.

Illustration 18

➔ Rinse off the floor head cover under running water.

➔ Clean the waste water tank and rollers.
See chapter "Cleaning the waste water tank".
See chapter "Cleaning the rollers".

➔ Clean the roller drive with a moist cloth.

Illustration 22

➔ Insert the floor head cover into the floor head.

Cleaning the rollers

ATTENTION

The rollers should be washed under a tap or cleaned in a washing machine after each use to prevent accumulation of detergent residues in the rollers that can lead to the formation of foam over time.

The fresh water tank and waste water tank must be emptied if the device is laid on the floor in order to remove the rollers. This prevents liquids from escaping from the tanks while the device is lying on the floor.

Illustration 11

➔ Switch off the appliance; press the on/off button to do so.

Illustration 2

➔ Place the device in the parking station.

Illustration 19

➔ Twist out the cleaning rollers from the recessed grip.

Illustration 20

➔ Clean the cleaning rollers under running water.

or

➔ Wash the cleaning rollers in the washing machine up to 60°C.

ATTENTION

Do not use any soft detergents when cleaning in the washing machine. This avoids causing damage to the microfibres. It also preserves the high performance levels of the cleaning rollers.

The cleaning rollers are not suitable for the tumble dryer.

Figure 23 to 24

➔ Once cleaned, place the rollers on the cleaning station storage and leave them to air dry.

➔ Drying time can be minimized by wringing out the rollers beforehand.

➔ Also clean the floor head cover and waste water tank if the device is not going to be used further.

➔ Clean the roller drive with a moist cloth.

Detergents and care products

ATTENTION

The use of unsuitable cleaning and disinfecting agents can damage the appliance and will void the warranty.

Note

Add cleaning or disinfecting agent as required.

➔ When dosing the detergent and care product, follow the manufacturer's dosage instructions.

➔ To prevent foaming, first fill the fresh water tank with water then cleaning or disinfecting agent.

➔ To avoid exceeding the "MAX" fill level on the fresh water tank, leave room for the cleaning or disinfecting agent when filling with water.

Troubleshooting

Often, failures have simple causes and you can do the troubleshooting yourself using the following overview. If you are in doubt or if the failure is not listed here please contact the authorized customer service.

Battery is not charging

- Charging plug/mains plug not correctly connected.

➔ Connect charging plug/mains plug correctly.

The device cannot be switched on

- Battery is empty.

➔ Charge the device.

- Check whether the charging cable is still plugged into the device.

➔ Take out charging cable, operation is not possible while charging cable is plugged in.

LED fault display

Lowermost LED flashes when the device is switched on and does not start.

- Battery is empty.

➔ Charge the device.

All LEDs flash quickly simultaneously.

- The device has a motor blockage (e.g. due to excessive pressure on the rollers or through movement into a wall/corner).

➔ Switch on/off the appliance again.

or

- Use of wrong of defective mains plug.

➔ Use original mains plug/replace defective mains plug.

The three LEDs light up sequentially in a 1-second cycle.

- Device too hot during use (e.g. when operating in high ambient temperatures).

➔ Take a break and let the device cool down.

- If the device also switches off:

➔ Take a break and let the device cool down.

➔ The device can only be switched on again once it has cooled down enough.

Rollers are too dry

Rollers are not being sufficiently moistened.

➔ Moisten the rollers by moving back and forth over the same position.

Appliance is not sucking up dirt

No water in the fresh water tank.
➔ Refill water
Fresh water tank does not fit properly in the device.
➔ Insert the fresh water tank so that it sits snugly in the appliance.
Cleaning rollers missing or not fitted correctly.
➔ Fit the cleaning rollers or turn them onto the roller holder up to the mechanical stop.
Cleaning rollers are contaminated or worn.
➔ Clean the cleaning rollers.
or
➔ Replace the cleaning rollers.
The detergent has been forgotten, an incorrect dosage is being used or the incorrect detergent is being used
➔ Use only KÄRCHER detergent and be sure to use the correct dosage.
Floor head cover not installed correctly
➔ Check that the floor head cover is correctly seated. For this, remove the cover and then fit it back in place.

Formation of foam on the floor head and the floor

Note
Slight foam formation in the floor head during operation is normal and does not impair functionality. Further measures are only necessary when there is excessive foam formation (e.g. streaks of foam on the floor).
Incorrect detergent or incorrect dosage.
➔ Use only KÄRCHER detergent and be sure to use the correct dosage.
Device operation is based on the cleaning rollers removing dirt. Dirt and detergent residues from floor coverings collect in the waste water tank. This can lead to foam formation under some circumstances.
➔ Remove all dirt and detergent residues from the rollers using water.
Illustration 25
Illustration 26
Illustration 27
➔ In the event of excessive foam formation, add FoamStop to the empty waste water tank before starting cleaning. Please observe the dosage instructions on the bottle label.

Poor cleaning result

The rollers are dirty.
➔ Clean the rollers.
Rollers are not being sufficiently moistened.
➔ Moisten the rollers by moving back and forth over the same position.
Incorrect detergent or incorrect dosage.
➔ Use only KÄRCHER detergent and be sure to use the correct dosage.
Foreign detergents are present on the floor.
➔ Remove all detergent residues from the rollers using water.
➔ Clean the floor several times using the device and clean rollers, without using detergent. This removes detergent residues from the floor

Rollers do not turn

Rollers are blocked.
➔ Remove rollers and check if an object has become stuck in the rollers.
➔ Check that the rollers are screwed in as far as they will go onto the roller holder.
➔ Check that the floor head cover is correctly seated. For this, remove the cover and then fit it back in place.

Water vacuuming not optimum

Floor head cover not installed correctly
➔ Check that the floor head cover is correctly seated. For this, remove the cover and then fit it back in place.
The rollers are worn out.
➔ Replace the rollers.

Appliance is leaking waste water.

Waste water tank is overfilled.
➔ Empty the waste water tank right away.
Waste water tank does not fit properly in the appliance.
➔ Check that the floor head cover is firmly seated on the waste water tank.
➔ Check that the waste water tank flaps are correctly closed.

Removing the handle from the basic unit

ATTENTION
Do not remove the handle from the basic unit once it has been assembled.
The handle may only be removed from the basic unit if the unit is sent out for service purposes.
Illustration 28
See illustration at the end of the operating instructions
➔ Insert screwdriver at a 90 degree angle in the small opening at the rear side of the handle and remove handle.
ATTENTION
Please ensure that the connection cable between the basic unit and the handle are not damaged.

Technical specifications

Electrical connection		
Voltage	100-240	V
	1~50-60	Hz
Protection class	IPX4	
Device Protective class	III	
Charger protection class	II	
Rated power of appliance	40	W
Nominal battery voltage	7,2	V
Battery type	Li-Ion	
Operating time with full charge	20	min
Charging time for empty battery	4	h
Charger initial voltage:	9,5	V
Output current, charger	0,6	A
Performance data		
Roller revolutions per minute	500	rpm
Filling quantity		
Fresh water tank	360	ml
waste water tank	140	ml
Dimensions		
Weight (without accessories and cleaning fluids)	2,4	kg
Length	305	mm
Width	226	mm
Height	1220	mm
Cable length Charger	1800	mm

Subject to technical modifications!

Customer Service

Australia
KÄRCHER Pty. Ltd.
385 Ferntree Gully Road,
Mount Waverley, Victoria, AU. 3149

1800 675 714 (Free Call)
www.karcher.com.au

New Zealand
Karcher Ltd.
66 Allens Road,
East Tamaki, Aukland

(09) 274-4603
www.karcher.co.nz

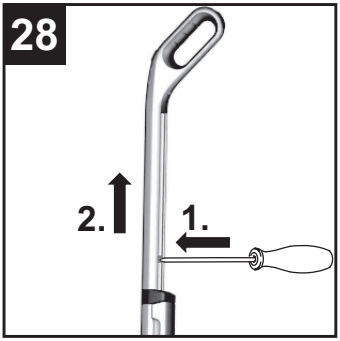
28
2.
1.

www.kaercher.com/dealersearch

Alfred Kärcher SE & Co. KG
Alfred-Kärcher-Str. 28-40
71364 Winnenden (Germany)
Tel.: +49 7195 14-0
Fax: +49 7195 14-2212