OPERATOR'S MANUAL

HD Gas +

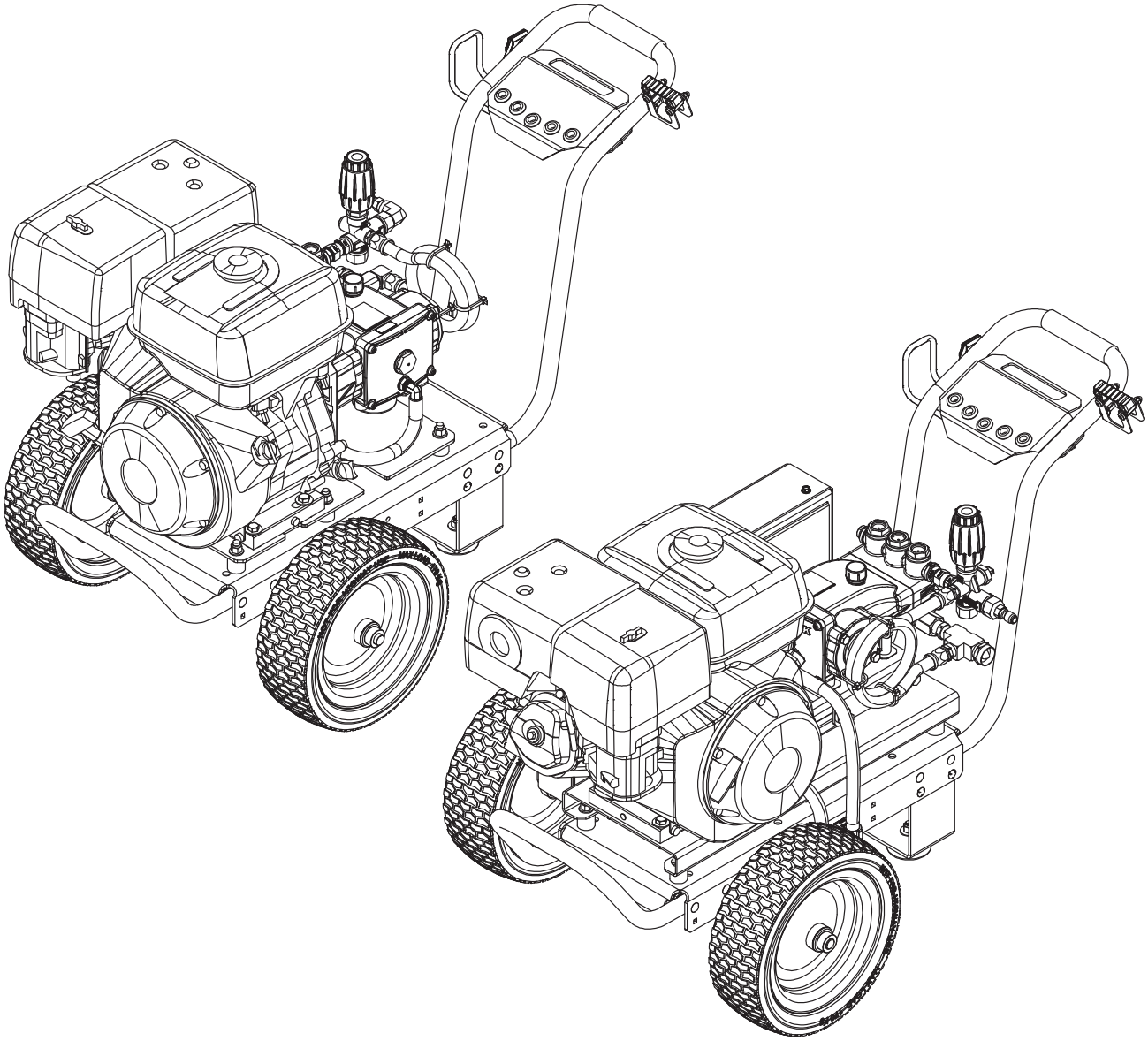

9.808-441.0-B 01/23/25

MODELS:

HD 3.0/27 G	1.107-503.0
HD 3.5/35 G	1.107-504.0
HD 4.0/40 G	1.107-505.0
HD 4.0/40 Ge	1.107-506.0
HD 3.0/27 GB	1.107-507.0
HD 3.5/35 GB	1.107-508.0
HD 4.0/40 GB	1.107-509.0
HD 4.0/40 GeB	1.107-510.0
HD 5.0/30 GB	1.107-511.0
HD 5.0/30 GeB	1.107-512.0
HD 3.0/27 G AR	1.107-513.0
HD 3.5/35 G AR	1.107-514.0
HD 4.0/40 G AR	1.107-515.0
HD 4.0/40 Ge AR	1.107-516.0
HD 3.0/27 GB AR	1.107-517.0
HD 3.5/35 GB AR	1.107-518.0
HD 4.0/40 GB AR	1.107-519.0
HD 4.0/40 GeB AR	1.107-520.0
HD 5.0/30 GB AR	1.107-521.0
HD 5.0/30 GeB AR	1.107-522.0
HD 3.0/27 G GP	1.107-523.0
HD 3.5/35 G GP	1.107-524.0
HD 4.0/40 G GP	1.107-525.0
HD 4.0/40 Ge GP	1.107-526.0
HD 3.0/27 GB GP	1.107-527.0
HD 3.5/35 GB GP	1.107-528.0
HD 4.0/40 GB GP	1.107-529.0
HD 4.0/40 GeB GP	1.107-530.0
HD 5.0/30 GB GP	1.107-531.0
HD 5.0/30 GeB GP	1.107-532.0

CONTENTS

Introduction & Important Safety Information 4
Component Identification 9
Assembly & Installation Instructions 11
Troubleshooting
For all direct driven models 19
Troubleshooting
For all belt driven models 22
Technical Specifications 25
QR Codes to Product Pages 27

Model Number _____

Serial Number _____

Date of Purchase _____

The model and serial numbers will be found on a decal attached to the waste water pump. You should record both serial number and date of purchase and keep in a safe place for future reference.

INTRODUCTION & IMPORTANT SAFETY INFORMATION

Thank you for purchasing this Pressure Washer.
We reserve the right to make changes at any time without incurring any obligation.

Owner/User Responsibility:

The owner and/or user must have an understanding of the manufacturer's operating instructions and warnings before using this pressure washer. Warning information should be emphasized and understood. If the operator is not fluent in English, the manufacturer's instructions and warnings shall be read to and discussed with the operator in the operator's native language by the purchaser/owner, making sure that the operator comprehends its contents.
Owner and/or user must study and maintain for future reference the manufacturers' instructions.
The operator must know how to stop the machine quickly and understand the operation of all controls. Never permit anyone to operate the motor without proper instructions.

SAVE THESE INSTRUCTIONS

This manual should be considered a permanent part of the machine and should remain with it if machine is resold.

When ordering parts, please specify model and serial number. Use only identical replacement parts.

This machine is to be used only by trained operators.

IMPORTANT SAFETY INFORMATION

Hazard levels

DANGER/DANGER/PELIGRO

Indication of an imminent threat of danger that will lead to severe injuries or even death.

Indique «une situation à risque imminent, laquelle si elle n'est pas évitée, entraînera des blessures sérieuses ou la mort».

Indicación de una amenaza inminente de peligro que provocará lesiones graves o incluso la muerte.

WARNING/ AVERTISSEMENT/ ADVERTENCIA

Indication of a potentially dangerous situation that may lead to severe injuries or even death.

Indique «une situation à risque potentiel, laquelle si elle n'est pas évitée, pourrait entraîner des blessures ou la mort».

Indicación de una situación potencialmente peligrosa que puede provocar lesiones graves o incluso la muerte.

CAUTION/ MISE EN GARDE/ PRECAUCIÓN

Indication of a potentially dangerous situation that may lead to minor injuries.

Indique «une situation à risque potentiel, laquelle si elle n'est pas évitée, peut causer des blessures mineures ou légères, ou des dommages matériels».

Indicación de una situación potencialmente peligrosa que puede provocar lesiones leves.

ATTENTION/ AVERTISSEMENT/ ATENCIÓN

Indication of a potentially dangerous situation that may lead to damage to property.

Indication d'une situation potentiellement dangereuse pouvant entraîner des dommages matériels.

Indicación de una situación potencialmente peligrosa que puede provocar daños materiales.

WARNING: To reduce the risk of injury, read operating instructions carefully before using.

AVERTISSEMENT: Pour réduire le risque de blessures, lire attentive- ment les instructions de fonctionnement avant l'utilisation.

ADVERTENCIA: Para reducir el riesgo de lesiones, lea cuidadosamente las instrucciones de operación antes de usar.

1. Read the owner's manual thoroughly. Failure to follow instructions could cause malfunction of the machine and result in death, serious bodily injury and/or property damage.
2. Know how to stop the machine and bleed pressure quickly. Be thoroughly familiar with the controls.
3. Stay alert — watch what you are doing.

WARNING: Keep wand, hose, and water spray away from electric wiring or fatal electric shock may result.

AVERTISSEMENT: Garder la lance, le boyau et le jet d'eau à l'écart de tout câblage électrique ou des chocs électriques mortels pourraient survenir.

ADVERTENCIA: Mantenga la varilla, la manguera y el rocío de agua lejos del cableado eléctrico, ya que podrían producirse descargas eléctricas fatales.

4. All installations must comply with local codes. Contact your electrician, plumber, utility company or the selling distributor for specific details.

WARNING: Flammable liquids can create fumes which can ignite, causing property damage or severe injury.

AVERTISSEMENT: Des liquides inflammables peuvent produire des vapeurs qui peuvent s'enflammer, causant ainsi des dommages à la propriété ou des blessures graves.

ADVERTENCIA: Los líquidos inflamables pueden generar vapores que pueden encenderse y causar daños a la propiedad o lesiones graves.

WARNING: Risk of explosion Operate only where open flame or torch is permitted.

AVERTISSEMENT: Risque d'explosion —Utiliser uniquement dans des endroits où l'utilisation d'une flamme nue ou d'une torche est permise.

ADVERTENCIA: Riesgo de explosión. Opere sólo donde se permitan llamas abiertas o soplete.

WARNING: Risk of fire — Do not add fuel when the product is operating or still hot.

AVERTISSEMENT: Risque d'incendie —Ne pas ajouter de carburant pendant que la machine fonctionner ou est encore chaude.

ADVERTENCIA: Riesgo de incendio -- No agregue combustible cuando el producto está en funcionamiento o aún está caliente.

WARNING: Do not use gasoline crankcase draining or oil containing gasoline, solvents or alcohol. Doing so will result in fire and/or explosion.

AVERTISSEMENT: Ne pas utiliser d'essence, de drainage du carter de moteur ou d'essence contenant de l'huile, de solvants ou de l'alcool. Agir de la sorte risquerait de créer un incendie et/ou une explosion.

ADVERTENCIA: No utilice el drenaje del cárter de gasolina ni aceite que contenga gasolina, solventes o alcohol. Hacerlo resultará en incendio y/o explosión.

WARNING: This product contains chemicals known to the state of California to cause cancer and birth defects or other reproductive harm. Operation of this equipment may create sparks that can start fires around dry vegetation. A spark arrestor may be required. The operator should contact: Local fire agencies for laws or regulations relating to fire prevention requirements.

AVERTISSEMENT : Ce produit contient des produits chimiques reconnus par l'État de Californie comme pouvant provoquer le cancer, des malformations congénitales ou d'autres troubles de la reproduction. L'utilisation de cet équipement peut créer des étincelles susceptibles de déclencher des incendies à proximité de végétation sèche. Un pare-étincelles peut être nécessaire. L'opérateur doit contacter : les agences locales de lutte contre les incendies pour connaître les lois ou réglementations relatives aux exigences en matière de prévention des incendies.

ADVERTENCIA: Este producto contiene sustancias químicas que el estado de California considera como causantes de cáncer y defectos congénitos u otros daños reproductivos. El funcionamiento de este equipo puede generar chispas que pueden provocar incendios cerca de vegetación seca. Es posible que se requiera un parachispas. El operador debe comunicarse con: Las agencias de bomberos locales para obtener información sobre las leyes o reglamentaciones relacionadas con los requisitos de prevención de incendios.

WARNING: Operation of this equipment may create sparks that can start fires around dry vegetation. A spark arrestor may be required. The operator should contact: Local fire agencies for laws or regulations relating to fire prevention requirements.

AVERTISSEMENT : L'utilisation de cet équipement peut créer des étincelles susceptibles de déclencher des incendies à proximité de végétation sèche. Un pare-étincelles peut être nécessaire. L'opérateur doit contacter : les agences locales de lutte contre les incendies pour connaître les lois ou réglementations relatives aux exigences en matière de prévention des incendies.

La operación de este equipo puede generar chispas que pueden iniciar incendios en vegetación seca. Es posible que se requiera un parachispas. El operador debe ponerse en contacto con las agencias de bomberos locales para conocer las leyes o regulaciones relacionadas con los requisitos de prevención de incendios.

5. Combustion appliances shall be installed only in locations where combustible dusts and flammable gases or vapors are not present. Do not store or use gasoline near this machine.

Allow engine to cool for 1-2 minutes before refueling. If any fuel is spilled, make sure the area is dry before testing the spark plug or starting the engine. (Fire and/or explosion may occur if this is not done.) Gasoline engines on mobile or portable equipment shall be refueled:

a. Outdoors
b. With the engine on the equipment stopped
c. With no source of ignition within 10 feet of the dispensing point
d. With an allowance made for expansion of the fuel should the equipment be exposed to a higher ambient temperature

In an overfilling situation, additional precautions are necessary to ensure that the situation is handled in a safe manner.

6. Do not allow acids, caustic or abrasive fluids to pass through the pump.
7. Keep operating area clear of all persons.

WARNING: High pressure spray can cause paint chips or other particles to become airborne and fly at high speeds. To avoid personal injury, eye, hand and foot safety devices must be worn.

AVERTISSEMENT: Un jet haute pression peut écailler la peinture ou provoquer l'émission d'autres particules dans l'air et leur projection à hautes vitesses. Pour éviter les lésions corporelles, une protection des yeux, du visage, des mains et des pieds doit être portée lors de l'utilisation de cet équipement.

ADVERTENCIA: El rociado a alta presión puede hacer que las partículas de pintura u otras partículas se transporten por aire y vuelen a altas velocidades. Para evitar lesiones personales, se deben usar dispositivos de seguridad para ojos, manos y pies.

8. Eye, hand, and foot protection must be worn when using this equipment.

WARNING: This machine exceeds 85 db appropriate ear protection must be worn.

AVERTISSEMENT : Cette machine excède 85 dB et une protection de l'ouïe appropriée doit être portée.

ADVERTENCIA: Esta máquina supera los 85 dB, se debe usar protección auditiva adecuada.

WARNING: Hot discharge fluid. Do not touch or direct discharge stream at persons or animals.

AVERTISSEMENT: Liquide de décharge chaud. Ne pas toucher ou décharger directement le jet vers des personnes o u des animaux.

ADVERTENCIA: Fluido de descarga caliente. No toque ni dirija el flujo de descarga a las personas o animales.

WARNING: This machine produces hot water and must have insulated components attached to protect the operator.

AVERTISSEMENT: Cette machine produit de l'eau chaude et doit comporter des composants isolés attachés pour protéger l'opérateur.

ADVERTENCIA: Esta maquina produce agua caliente y se deben tener componentes aislados para proteger al operador.

WARNING: Risk of injury. Hot surfaces can cause burns. Use only designated gripping and wait for the unit to cool down.

AVERTISSEMENT : risque de blessure. Les surfaces chaudes peuvent provoquer des brûlures. Utilisez uniquement les poignées prévues à cet effet et attendez que l'appareil refroidisse.

ADVERTENCIA: Riesgo de lesiones. Las superficies calientes pueden provocar quemaduras. Utilice únicamente los medios de sujeción indicados y espere a que la unidad se enfríe.

9. To reduce the risk of injury, close supervision is necessary when a machine is used near children. Do not allow children to operate the unit. **This machine must be attended during operation.**
10. Never make adjustments on machine while in operation.
11. When in use , do not place machine near flammable objects as the engine is hot.
12. Do not store or use gasoline near this machine.
13. Transport/Repair with fuel tank EMPTY or with fuel shut-off valve OFF.
14. Be certain all pump connections are securely tightened and that the quick coupler fittings are secured before using pressure washer.
15. Never run pump dry or leave spray gun closed longer than 1-2 minutes.
16. Drain water after each use and before storing.

WARNING: Do not direct discharge stream at people or animals, or severe injury or death will result.

Ne pas décharger directement le jet vers des personnes ou animaux, cela pourrait causer des blessures graves voire la mort.

No dirija el flujo de descarga a las personas o animales, ya que se producirán lesiones graves o la muerte.

WARNING: Protect machine from freezing.

AVERTISSEMENT: Protéger la machine contre le gel.

ADVERTENCIA: Proteja la máquina contra congelamiento.

17. To keep machine in best operating conditions, it is important you protect machine from freezing. Failure to protect machine from freezing could cause malfunction of the machine and result in death, serious bodily injury, and/or property damage. Follow storage instructions specified in this manual.
18. Suddenly stopping the discharge of water can result in Water Hammer, which can break the pump housing.
19. Inlet water must be clean fresh water and no hotter then 90°F.

WARNING: Risk of asphyxiation. Use this product only in a well ventilated area.

AVERTISSEMENT: Risque d'asphyxie. Utiliser ce produit uniquement dans un endroit bien ventilé.

ADVERTENCIA: Riesgo de asfixia. Use este producto sólo en un área bien ventilada.

20. Avoid installing machines in small areas or near exhaust fans. Adequate oxygen is needed for combustion or dangerous carbon monoxide will result.
21. Manufacturer will not be liable for any changes made to our standard machines or any components not purchased from us.
22. The best insurance against an accident is precaution and knowledge of the machine.
23. Protect discharge hose from vehicle traffic and sharp objects. Inspect condition of high pressure hose before using or bodily injury may result.
24. Before disconnecting discharge hose from water outlet. Open the spray gun to relieve pressure.

WARNING: Be extremely careful when using a ladder, scaffolding or any other relatively unstable location. The cleaning area should have adequate slopes and drainage to reduce the possibility of a fall due to slippery surfaces.
AVERTISSEMENT: Faire preuve d'une extrême prudence au moment d'utiliser une échelle, des échafaudages ou toute autre surface relativement instable. La zone de nettoyage doit avoir une pente et un drainage adéquats pour réduire la possibilité d'une chute due à une surface glissante
ADVERTENCIA: Tenga mucho cuidado al usar una escalera, andamios o cualquier otra ubicación relativamente inestable. El área de limpieza debe tener pendientes y drenaje adecuados para reducir la posibilidad de una caída debido a las superficies resbaladizas.

25. Do not overreach or stand on unstable support. Keep good footing and balance at all times.
26. Do not operate this machine when fatigued or under the influence of alcohol, prescription medications or drugs.

27. Machines with shut-off spray gun should not be operated with the spray gun in the off position for extensive periods of time as this may cause damage to the pump.
28. Protect discharge hose from vehicle traffic and sharp objects. Inspect condition of high pressure hose before using or bodily injury may result.

WARNING: Wear eye, hand and skin protection when handling or connecting battery. Batteries generate explosive gases during normal battery operation. DO NOT expose the battery to flame or sparks as these gases may ignite.

Battery fluid is highly acidic. If battery fluid con tacts skin or clothing, wash immediately with soap and water. If battery fluid enters eye, immediately flood eye with running cold water for at least 15 minutes and get immediate medical attention.

AVERTISSEMENT: Porter une protection des yeux, des mains et de la peau au moment de manipuler ou de connecter la batterie. Les batteries génèrent des gaz explosifs au cours de leur fonctionnement normal. NE PAS exposer la batterie aux flammes ou aux étincelles, car ces gaz pourraient s'enflammer.

Le liquide de batterie est très acide. Si le liquide de batterie entre en contact avec la peau ou les vêtements, laver immédiatement à l'eau et au savon. Si le liquide de la batterie entre en contact avec les yeux, rincer immédiatement les yeux avec de l'eau froide pendant au moins 15 minutes, puis obtenir des soins médicaux immédiats.

ADVERTENCIA: Use protección para los ojos, las manos y la piel cuando manipule o conecte la batería. Las baterías generan gases explosivos durante el funcionamiento normal de la batería. NO exponga la batería a llamas o chispas ya que estos gases pueden encenderse.

El fluido de la batería es altamente ácido. Si el líquido de la batería entra en contacto con la piel o la ropa, lávese inmediatamente con agua y jabón. Si el líquido de la batería entra en los ojos, lave inmediatamente con agua fría durante al menos 15 minutos y obtenga atención médica de inmediato.

WARNING: Grip cleaning wand securely with both hands before starting. Failure to do this could result in injury from a whipping wand.

AVERTISSEMENT: Agripper la lance de nettoyage avec les deux mains avant de commencer. Le non-respect de cette consigne pourrait mener à des blessures causées par le mouvement violent.

ADVERTENCIA: Sujete la varilla de limpieza firmemente con ambas manos antes de comenzar. De lo contrario, se podrían producir lesiones a causa del latigazo producido por la varilla.

Follow the maintenance instructions specified in the manual

Suivre les instructions d'entretien spécifiées dans le manuel.

Siga las instrucciones de mantenimiento especificadas en el manual.

SYMBOLS ON THE MACHINE

Risk of burns on account of hot surfaces!

¡Riesgo de quemaduras debido a superficies calientes!

Risque de brûlures en raison de surfaces chaudes !

COMPONENT IDENTIFICATION

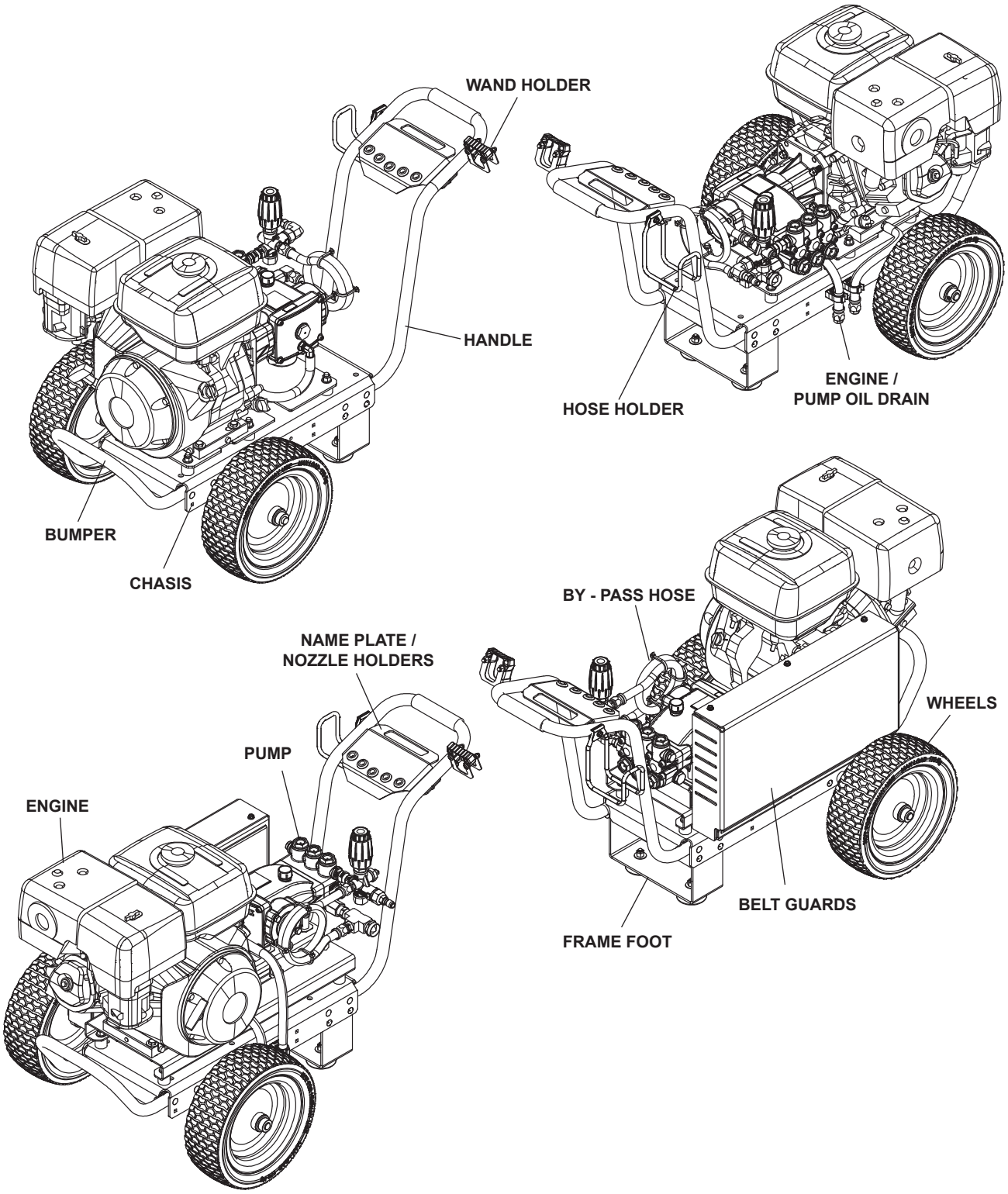

COMPONENT IDENTIFICATION

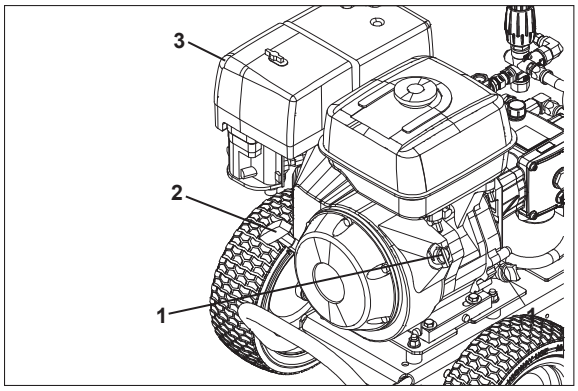

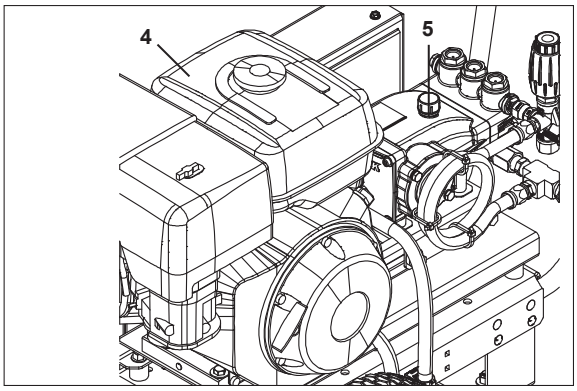

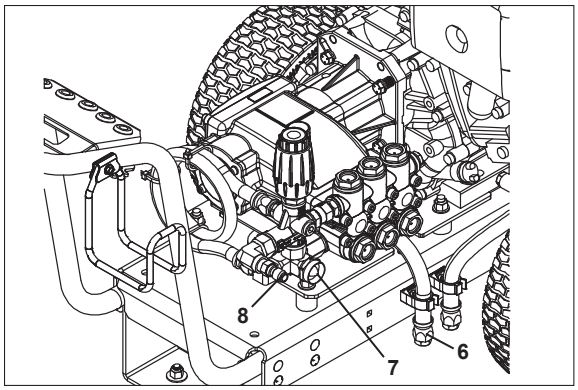

1. Switch on/off
2. Pull starter
3. Air filter
4. Gasoline tank
5. Oil fill port
6. Oil drain
7. Pump suction port
8. Pump discharge port

OPERATING CONTROLS

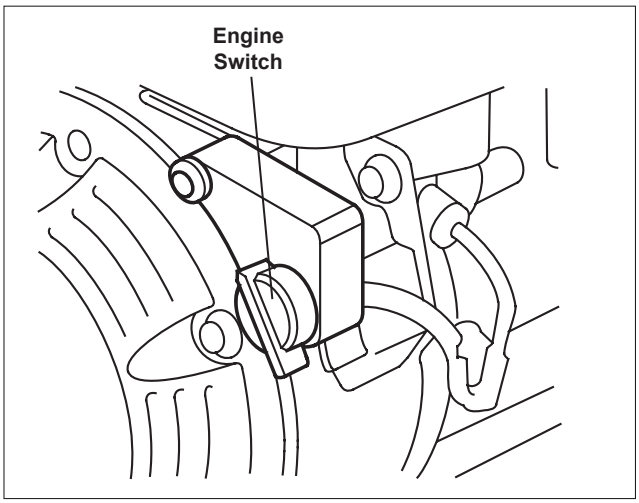

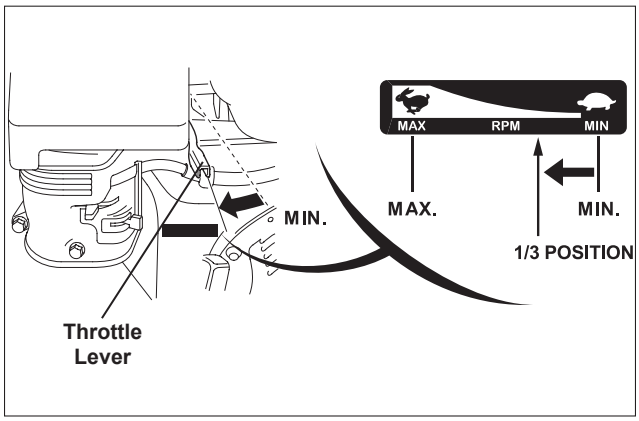

Engine switch: On / off
Throttle lever: Engine speed

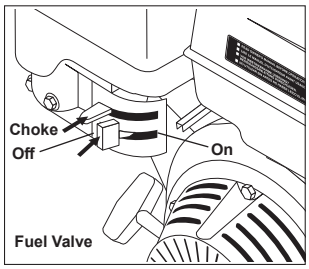

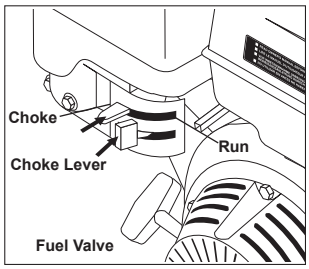

ASSEMBLY & INSTALLATION INSTRUCTIONS

ASSEMBLY

Unpacking

Unpack carefully. Wear safety glasses or goggles while unpacking, assembling or operating the pressure washer. If there are missing components or hidden damage immediately contact distributor or carrier concerning discrepancies.

1. Cut strapping band from pallet.
2. Remove protective bag and plastic wrap.
3. Remove anchors.
4. Remove included accessories.
5. Remove the unit from pallet.

Check the contents of the pack before unpacking. For accesories included see page 39.

INSTALLATION

Getting Started

IMPORTANT: Proper initial installation of equipment will assure more satisfactory performance, longer service life and lower maintenance cost.

IMPORTANT : Une installation initiale correcte de l'équipement assurera une performance plus satisfaisante, une durée de vie plus longue et des coûts de maintenance réduits.

IMPORTANTE: Una instalación adecuada inicial del equipo garantizará un rendimiento más satisfactorio, una vida útil más prolongada y un menor costo de mantenimiento.

The unit should be run on a level surface where it is not readily influenced by outside sources such as strong winds, freezing temperatures, rain, etc. The unit should be located to assure easy access for filling of fluids, adjustments and maintenance. Normal precautions should be taken by the operator to prevent moisture from reaching the pressure washer.

Placement

Do not locate near any combustible material. Keep all flammable material at least 20 feet away.
Allow enough space for servicing the machine.
Local code will require certain distances from floor and walls. (Two feet away from walls should be adequate).

Venting

CAUTION: All venting must be in accordance with applicable federal and state laws, and local ordinances. Consult local heating contractors.

ATTENTION : Toute ventilation doit être conforme aux lois fédérales et nationales en vigueur, ainsi qu'aux ordonnances locales. Consultez les chauffagistes locaux.

PRECAUCIÓN: Toda ventilación debe realizarse de acuerdo con las leyes federales y estatales aplicables y las ordenanzas locales. Consulte con los contratistas de calefacción locales.

CAUTION: This product is labeled of outdoor use only and should be operated outdoors. It is not recommended to operate indoors. If under certain conditions that make it impossible to operate outdoors you can operate indoor using a hood vent or venting. Venting can cause restriction of air flow through the combustion chamber causing excessive soot. Use a larger vent size then the exhaust stack to prevent restriction and contact the local servicing dealer to adjust the air mixture after installation of vent.

ATTENTION : Ce produit est étiqueté pour une utilisation en extérieur uniquement et doit être utilisé à l'extérieur. Il n'est pas recommandé de l'utiliser à l'intérieur. Si certaines conditions rendent impossible l'utilisation à l'extérieur, vous pouvez l'utiliser à l'intérieur en utilisant une hotte ou une ventilation. La ventilation peut entraîner une restriction du flux d'air à travers la chambre de combustion, provoquant une suie excessive. Utilisez une taille de ventilation plus grande que la cheminée d'échappement pour éviter toute restriction et contactez le revendeur local pour ajuster le mélange d'air après l'installation de la ventilation.

PRECAUCIÓN: Este producto está etiquetado para uso en exteriores únicamente y debe ser operado al aire libre. No se recomienda su uso en interiores. Si existen ciertas condiciones que hacen imposible su operación en exteriores, se puede operar en interiores utilizando una campana extractora o un sistema de ventilación. Sin embargo, la ventilación puede provocar una restricción del flujo de aire a través de la cámara de combustión, lo que puede causar acumulación excesiva de hollín. Utilice un tamaño de ventilación más grande que la salida de escape para evitar restricciones y póngase en contacto con el distribuidor de servicio local para ajustar la mezcla de aire después de instalar el respiradero.

ASSEMBLY & INSTALLATION INSTRUCTIONS

Setting up the unit

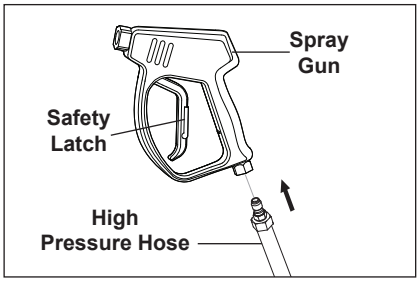

STEP 1: Attach the high pressure hose to the spray gun using teflon tape on hose threads.

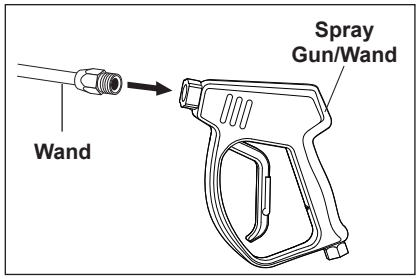

STEP 2: Attach wand to spray gun using teflon tape on wand threads.

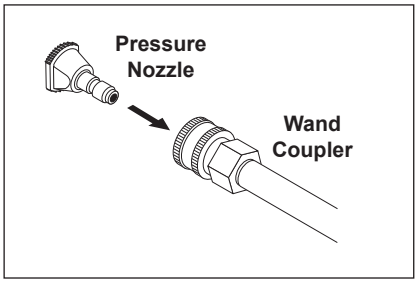

STEP 3: Pull spring-loaded collar of the wand coupler back to insert your choice of pressure nozzle.

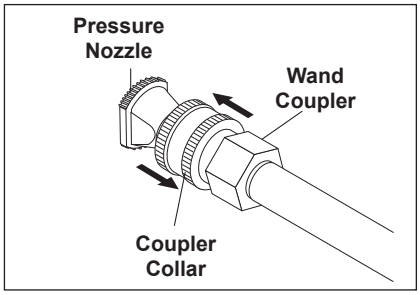

STEP 4: Release the coupler collar and push the nozzle until the collar clicks. Pull the nozzle to make sure it is seated properly.

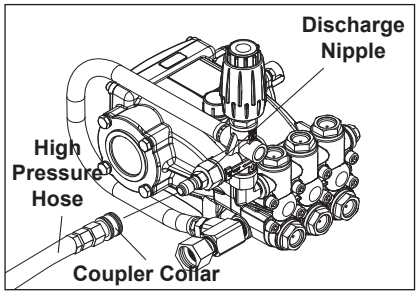

STEP 5: Connect the high pressure hose to the discharge nipple. Push coupler collar forward until secure.

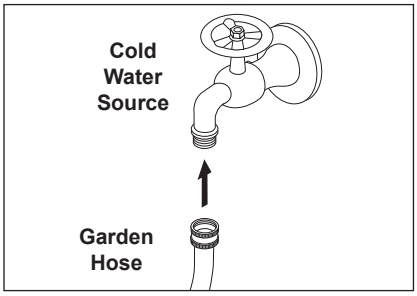

STEP 6: Connect garden hose to the cold water source.

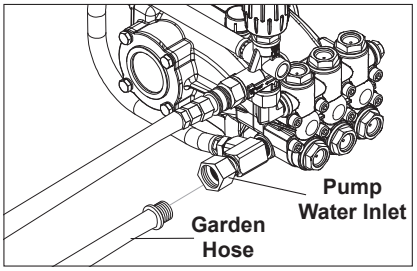

STEP 7: Check inlets filters, remove debris, then connect the garden hose to pump water inlet.

CAUTION: Do not run the pump without water or pump damage will result.

MISE EN GARDE : Ne pas faire fonctionner la pompe sans eau pour éviter d'endommager la pompe.

PRECAUCIÓN: No opere la bomba sin agua o resultará en daños a la misma.

STEPS 8 and 9 for Electric Start Machines Only (HD 4.0/40 Ge and HD 4.0/40 GeB)

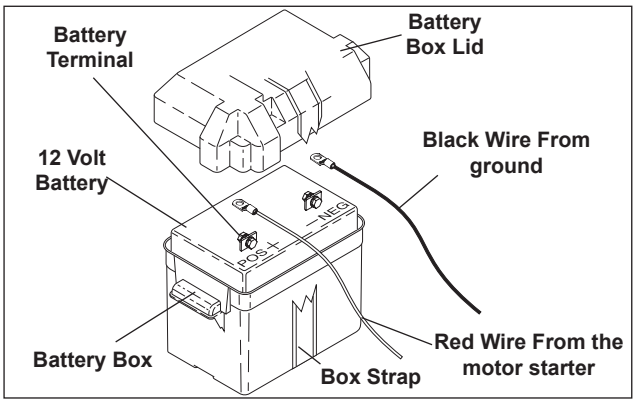

STEP 8: Place battery in battery box. Use a 12 V battery with a minimum capacity of 24AH.
STEP 9: To reduce the possibility of sparking attach the wires to the battery in the following order.Refere to image aside. First attach the red wire to the positive “+" terminal of battery and the black wire to the negative “-" terminal of the battery.To disconnect the battery remove the wires in the opposite order as installed. Install battery box cover and fasten in place.

WARNING: Ensure that no person, animal nor object that can be damaefed is on front of the discharge hose end.

AVERTISSEMENT: Assurez-vous qu'aucune personne, aucun animal ni aucun objet pouvant être endommagé ne se trouve devant l'extrémité du tuyau de refoulement.

ADVERTENCIA: Asegúrese de que ninguna persona, animal y objeto que pueda resultar dañado se encuentre frente al extremo de la manguera de descarga.

Starting And Operating Engine

ATTENTION: If the UNIT has not been used for an extended periord of time, change the fuel. Fuel stored over 30 Days on the tank may cause engine failure.

ATTENTION: Si l'appareil n'a pas été utilisé pendant une période prolongée, changez le carburant. Le carburant stocké plus de 30 jours dans le réservoir peut provoquer une panne du moteur.

ATENCIÓN: Si la UNIDAD no se ha utilizado durante un período prolongado, cambie el combustible. El combusitlbe almacenado durante mas de 30 días en el tanque puede provocar fallas en el motor.

1. Review the oil level and refill if necessary to the correct level.

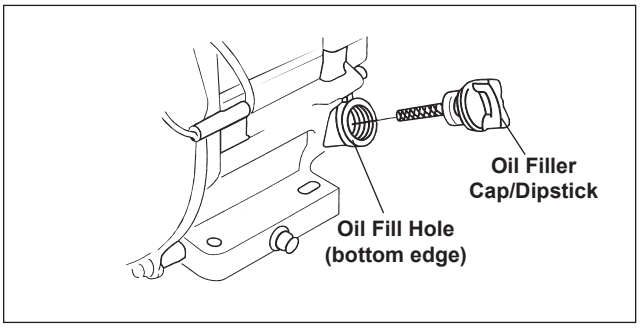

2. Inspect air filter before turning on.
3. Remove shipping cap and install oil dipstick. Check pump oil level by using dipstick or observe oil level in oil window (if equipped). Use 40 wt. non detergent oil.

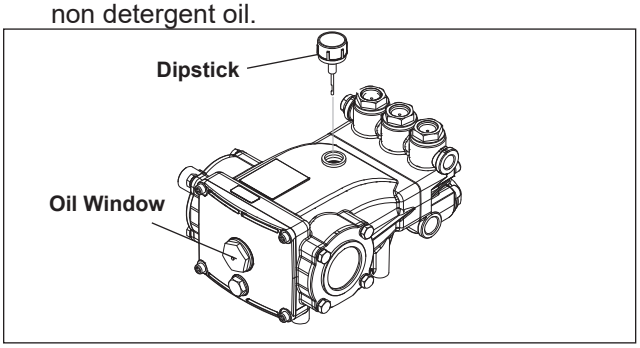

4. Fill the gas tank with unleaded gasoline. Do not use leaded gasoline.

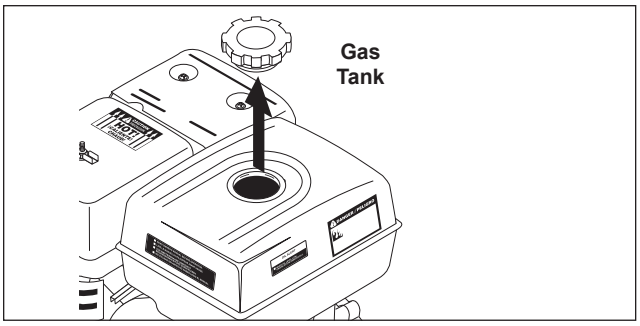

5. Connect garden hose to the cold water source and turn water on completely. Never use hot water.

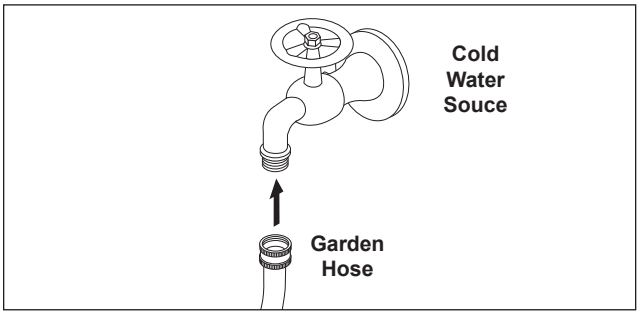

ATTENTION: A warm engine require less choking than a cold engine.
ATTENTION : Un moteur chaud nécessite moins d'étranglement qu'un moteur froid.
ATENCIÓN: Un motor caliente requiere menos estrangulamiento que un motor frío.

6. Trigger the spray gun to eliminate trapped air then wait for a steady flow of water to emerge from the spray nozzle.

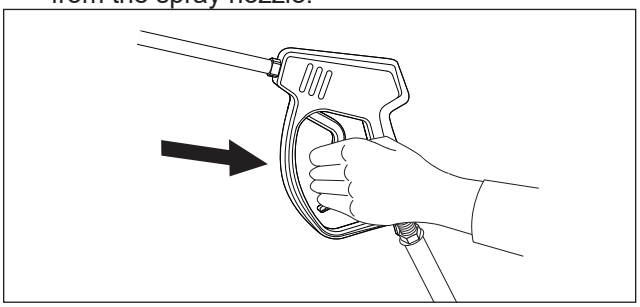

7. Set the fuel valve lever to the right or "on" position.

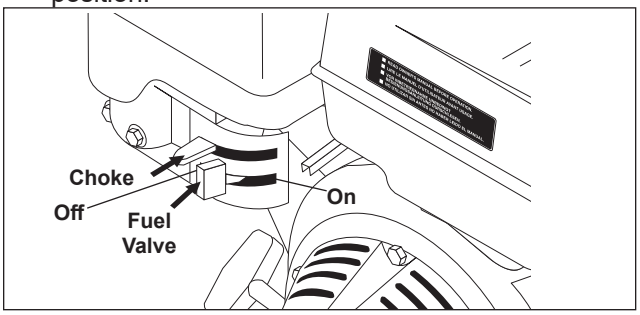

8. Set the choke control level to the left or "choke" position.

ATTENTION: A warm engine require less choking than a cold engine.

ATTENTION: Un moteur chaud nécessite moins d'etranglement qu'un moteur froid.

ATENCIÓN: Un motor caliente requiere menos estrangulamiento que un motor frío.

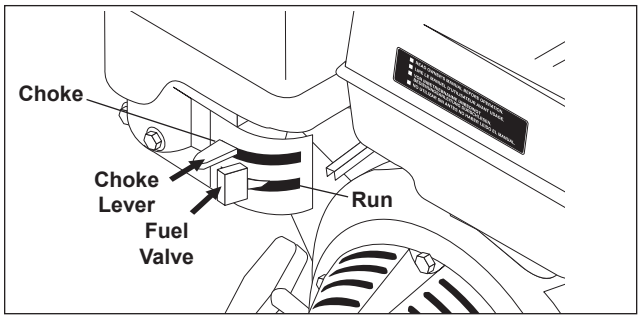

9. Move the throttle to the left or "fast" position.
10. Change the engine switch to on position.

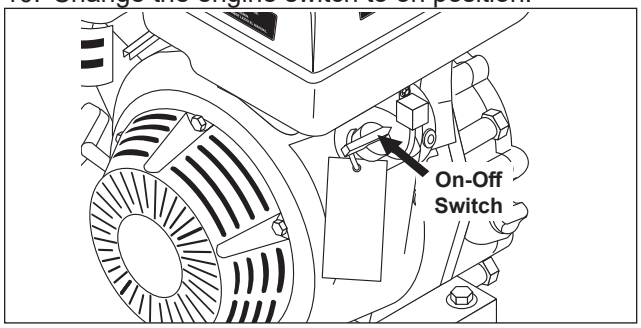

11. Pull the recoil starter lightly until resistance is felt, then pull strongly.

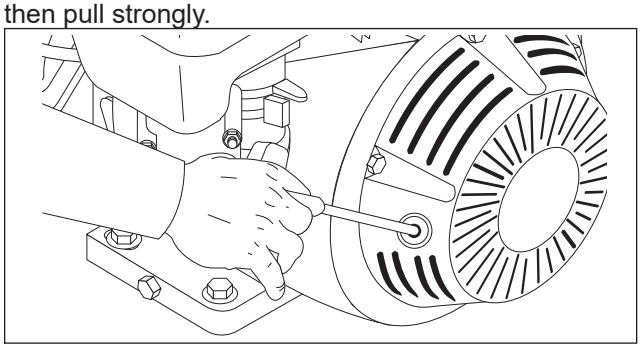

11. Slowly return the starter coil.
12. Set the choker lever to the right once the engine has started.

CAUTION: When starting the engine using the recoil starter, ensure you maintain a firm grip and pull the starter handle smoothly to prevent injury. Avoid rapid or jerky motions to reduce the risk of recoil-related injuries. Always follow the manufacturer's instructions and safety guidelines.

ATTENTION : Lors du démarrage du moteur à l'aide du lanceur à rappel, veillez à maintenir une prise ferme et à tirer doucement sur la poignée du lanceur pour éviter toute blessure. Évitez les mouvements rapides ou saccadés pour réduire le risque de blessures liées au lanceur à rappel. Suivez toujours les instructions et les consignes de sécurité du fabricant.

PRECAUCIÓN: Al encender el motor con el arrancador manual, asegúrese de sujetarlo con firmeza y tirar de la manija de arranque con suavidad para evitar lesiones. Evite movimientos rápidos o bruscos para reducir el riesgo de lesiones relacionadas con el arranque manual. Siga siempre las instrucciones y las pautas de seguridad del fabricante.

ATTENTION: If the engine fails to start refer to the trouble shooting guide of the engine manufacturer.

ATTENTION : Si le moteur ne démarre pas, reportez-vous au guide de dépannage du fabricant du moteur.

ATENCIÓN: Si el motor no arranca, consulte la guía de solución de problemas del fabricante del motor.

Shutting down in an emergency

ATTENTION: To stop the engine in emergency, turn the engine switch to "off" position.

ATTENTION : Pour arrêter le moteur en cas d'urgence, tournez l'interrupteur du moteur sur la position « off ».

ATENCIÓN: Para detener el motor en caso de emergencia, gire el interruptor del motor a la posición "apagado" (OFF).

WARNING Never replace nozzles without engaging the safety latch on the spray gun trigger.

AVERTISSEMENT! Ne jamais remplacer les buses sans d'abord mettre le dispositif de sécurité sur la détente du pistolet pulvérisateur.

¡ADVERTENCIA! Nunca reemplace las boquillas sin activar el pestillo de seguridad en el gatillo de la pistola rociadora.

The four color-coded quick connect nozzles provide a wide array of spray widths from 15° to 40° and are easily accessible when placed in the convenient rubber nozzle holder, which is provided on the machine.

NOTE: For a more gentle rinse, select the white 40° or green 25° nozzle. To scour the surface, select the yellow 15° nozzle. To apply detergent select the black nozzle.

Shutting down

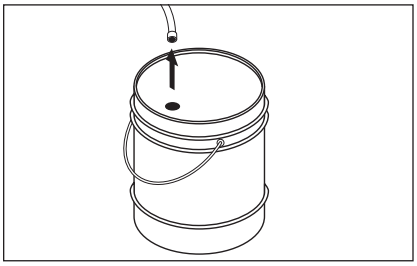

STEP 1: Remove detergent suction tube from container and insert into one gallon of fresh water. Slide nozzle forward for low pressure or to connect black detergent nozzle. Pull trigger on spray gun and siphon water for one minute.

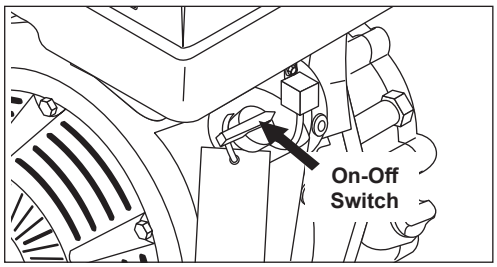

STEP 2: Move the throttle level fully to the right or slow position.
STEP 3: Turn the switch to the "off" position.
STEP 4: Turn the choker lever to the "off" position.
STEP 5: Turn the fuel valve lever to the "off" position.

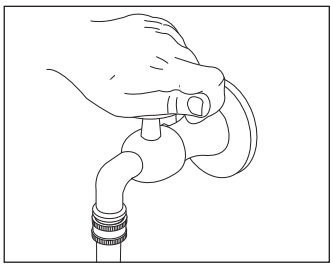

STEP 6: Turn off the water supply.

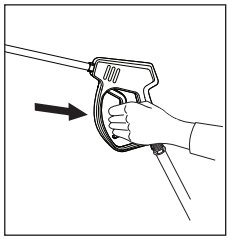

STEP 7: Press trigger to release water pressure form the system.

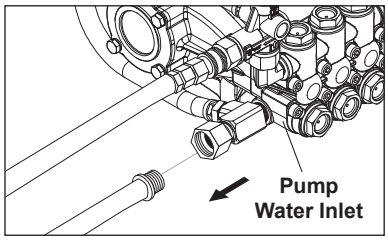

STEP 8: Disconnect the garden hose from the water inlet on the machine.

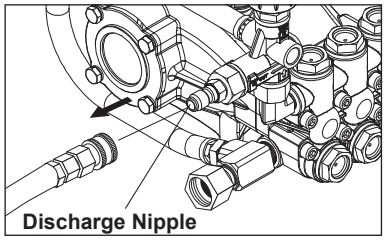

STEP 9: Disconnect the high pressure hose from discharge nipple.

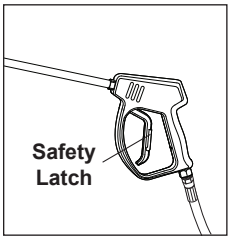

STEP 10: Engage the spray gun safety lock.
STEP 11: Allow the engine to cool, then wipe unit with a damp cloth.

Transport

1. Shut down the unit
2. Allow the engine to cool down for at least 15 minutes before loading.
3. Keep the device horizontal during transport to prevent fuel from spilling out.
4. When transporting in vehicles, secure the device against rolling away, slipping and tipping according to the respectively applicable guidelines.
5. Be aware of the weight of the device during transport.

Storage

CAUTION: Be aware of the weight of the device during storage.

ATTENTION : Tenez compte du poids de l'appareil pendant le stockage.

PRECAUCIÓN: Tenga en cuenta el peso del dispositivo durante el almacenamiento.

ATTENTION: Do not place any heavy objects on the device. Store the device in a dry and dust free place.

ATTENTION : Ne placez aucun objet lourd sur l'appareil. Rangez l'appareil dans un endroit sec et à l'abri de la poussière.

ATENCIÓN: No coloque objetos pesados sobre el dispositivo. Guarde el dispositivo en un lugar seco y sin polvo.

1. Stop the pressure washer, squeeze spray gun trigger to release pressure.
2. Detach water supply hose and high pressure hose.
3. Turn on the machine for a few seconds, until remaining water exits. Turn engine off immediately.
4. Allow the device to cool down for a half-hour if it was recently in operation.
5. Do not allow high pressure hose to become kinked.
6. Store the machine and accessories in a room which does not reach freezing temperatures.

7. The device must be cleaned before storage.

If storage duration is 1-2 months

1. Add fuel stabilizer to the fuel tank.
2. Top up the fuel tank.
3. Top up engine oil to upper level.

If storage duration is 2-12 months

1. Close the fuel valve lever.
2. Place a container on the carburator.
3. Un-screw the carburator drain .
4. Collect the fuel.
5. Screw in and tighten the drain screw.
6. Empty the settling cup (see "Care and Maintenance/Cleaning the settling cup").

If storage duration is longer than 12 months

Additionally:
1. Unscrew the spark plug.
2. Add engine oil to the cylinder, 5-10 cc.
3. Slowly pull the starter cord several times to distribute the oil in the engine.
4. Screw in the spark plug.
5. Change the oil.
6. Pull the starter cord slowly until a strong resistance is discernible.

MAINTENANCE PROCESS

Check the air filter

1. Lift the strap and remove the cover.
2. Check the air filter insert for soiling. Clean the air filter if necessary or replace if damaged (see "Cleaning the air filter").
3. Fit the cover and latch into place.

Cleaningthe air filter

ATTENTION: Penetrating dust can destroy the engine if the air filter is absent do not operate the unit without an air filter.

ATTENTION : La poussière pénétrante peut détruire le moteur si le filtre à air est absent, ne pas faire fonctionner l'appareil sans filtre à air.

ATENCIÓN: El polvo que penetra puede destruir el motor. Si no hay filtro de aire, no opere la unidad sin filtro de aire.

1. Open the air filter (see "Checking the air filter").
2. Remove the air filter insert.
3. Wash the air filter insert in warm water and household cleaner then rinse with clear water.

ATTENTION: Dispose of the oil contaminated washing solution in an environmentally friendly manner.

ATTENTION : Éliminez la solution de lavage contaminée par l'huile de manière respectueuse de l'environnement.

ATENCIÓN: Deseche la solución de lavado contaminada con aceite de manera respetuosa con el medio ambiente.

4. Allow the air filter insert to dry.
5. Saturate the air filter insert in clean engine oil and press out the excess oil.
6. Fit the air filter insert back into place.
7. Fit the cover.
8. Close the latches.

Oil change

Perform the oil change on a warm engine.
1. Unscrew the oil dipstick.
2. Unscrew the oil drain screw with seal and catch the escaping oil.
3. Screw in and tighten the oil drain screw with seal.
4. Position the device on a level surface.
5. Measure the correct quantity of engine oil (for the quantity inspect the engine manual) and fill through the oil dipstick hole.
6. Check the oil level. Screw in and tighten the oil dipstick.
7. Dispose of the old oil in accordance with the environmental regulations.

Cleaning the sediment cup

WARNING: Gasoline is highly flammable and explosive, and you can be burned or seriously injured when handling fuel. Handle fuel only outdoors. Stop engine and keep heat, sparks, and flame away. Wipe up spills immediately.

AVERTISSEMENT : L'essence est extrêmement inflammable et explosive. Vous pouvez être brûlé ou gravement blessé en manipulant du carburant. Ne manipulez le carburant qu'à l'extérieur. Arrêtez le moteur et éloignez la chaleur, les étincelles et les flammes. Essuyez immédiatement les déversements.

ADVERTENCIA: La gasolina es altamente inflamable y explosiva, y puede sufrir quemaduras o lesiones graves al manipular combustible. Manipule el combustible únicamente al aire libre. Apague el motor y mantenga alejados el calor, las chispas y las llamas. Limpie los derrames de inmediato.

The settling cup separates water from the fuel.
1. Move the fuel valve to the OFF position, then remove the fuel sediment cup and O-ring.
2. Wash the sediment cup in non-flammable solvent, and dry it thoroughly.

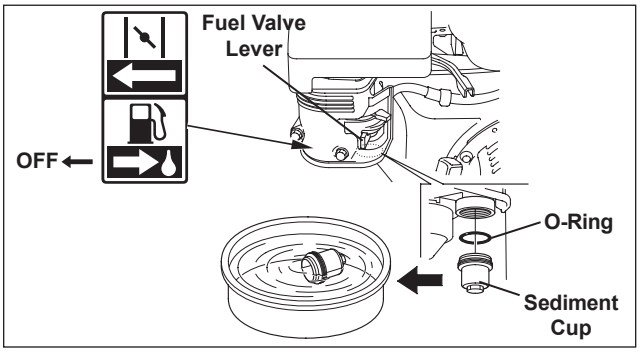

3. Place the O-ring in the fuel valve, and install the sediment cup. Tighten the sediment cup securely.
4. Move the fuel valve to the ON position, and check for leaks. Replace the O-ring if there is any leakage.

Spark plug

ATTENTION: An incorrect spark plug can cause engine damage.

ATTENTION : Une bougie d'allumage incorrecte peut endommager le moteur.

ATENCIÓN: Una bujía incorrecta puede provocar daños en el motor.

The recommended spark plug has the correct heat range for normal engine operating temperatures (for recommended spark plug see engine manual).

For good performance, the spark plug must be properly gapped and free of deposits.

1. Disconnect the spark plug cap, and remove any dirt from around the spark plug area.
2. Remove the spark plug with a 13/16-inch spark plug wrench.

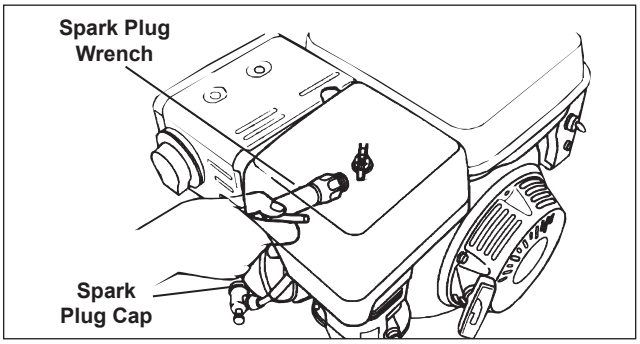

3. Inspect the spark plug. Replace it if damaged or badly fouled, if the sealing washer is in poor condition, or if the electrode is worn
4. Measure the spark plug electrode gap with a wiretype feeler gauge. Correct the gap, if necessary, by carefully bending the side electrode. The gap should be: 0.70 0.80 mm (0.028 0.031 in).
5. Install the spark plug carefully, by hand, to avoid crossthreading.
6. After the spark plug is seated, tighten with a 13/16-inch spark plug wrench to compress the sealing washer.
7. When installing a new spark plug, tighten 1/2 turn after the spark plug seats to compress the washer
8. When reinstalling the original spark plug, tighten 1/8 1/4 turn after the spark plug seats to compress the washer.

ATTENTION: A loose spark plug can overheat and damage the engine. Overtightening the spark plug can damage the threads in the cylinder head.

ATTENTION : Une bougie mal serrée peut surchauffer et endommager le moteur. Un serrage excessif de la bougie peut endommager les filetages de la culasse.

ATENCIÓN: Una bujía suelta puede sobrecalentarse y dañar el motor. Si se aprieta demasiado la bujía, se pueden dañar las roscas de la culata.

9. Attach the spark plug cap to the spark plug.

Spark arrester

The spark arrester may be standard or an optional part, depending on the engine type. In some areas, it is illegal to operate an engine without a spark arrester. Check local laws and regulations. A spark arrester is available from authorized Honda servicing dealers. The spark arrester must be serviced every 100 hours to keep it functioning as designed. If the engine has been running, the muffler will be hot. Allow it to cool before servicing the spark arrester.

Spark arrester removal

1. Remove the two 8 mm nuts and remove the muffler from the cylinder.
2. Remove the three 4 mm screws from the exhaust deflector, and remove the deflector.
3. Remove the four 5 mm screws from the muffler protector and remove the muffler protector.
4. Remove the 4 mm screw from the spark arrester, and remove the spark arrester from the muffler.

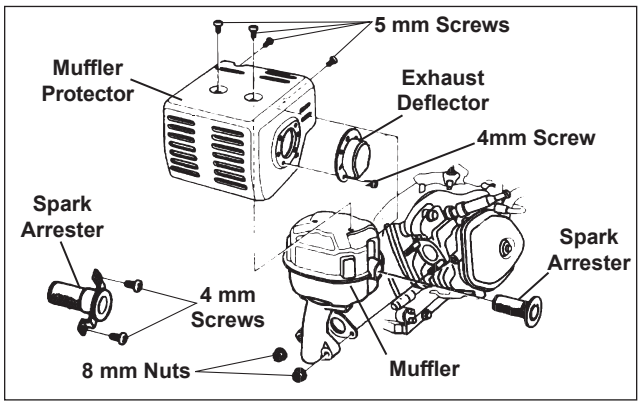

Spark arrester cleaning & inspection

1. Use a brush to remove carbon deposits from the spark arrester screen. Be careful not to damage the screen. Replace the spark arrester if it has breaks or holes.
2. Install the spark arrester, muffler protector, exhaust deflector and muffler in the reverse order of disassembly.

Idle speed (adjusting)

1. Start the engine outdoors, and allow it to warm up to operating temperature.
2. Move the throttle lever to its minimum position.
3. Turn the throttle stop screw to obtain the standard idle speed.

Draining tank fuel and carburator

WARNING: Gasoline is highly flammable and explosive, and you can be burned or seriously injured when handling fuel.

AVERTISSEMENT : L'essence est hautement inflammable et explosive, et vous pouvez être brûlé ou gravement blessé lors de la manipulation du carburant.

ADVERTENCIA: La gasolina es altamente inflamable y explosiva y usted puede sufrir quemaduras o lesiones graves al manipular combustible.

- ***Stop engine and keep heat, sparks, and flame away.***
- ***Handle fuel only outdoors.***
- ***Wipe up spills immediately.***

1. Place an approved gasoline container below the carburetor, and use a funnel to avoid spilling fuel.
2. Remove the carburetor drain bolt and gasket. Remove the sediment cup and O-ring, then move the fuel valve lever to the ON position.
3. After all the fuel has drained into the container, reinstall the drain bolt, gasket, sediment cup and O-ring. Tighten the drain bolt and sediment cup securely.

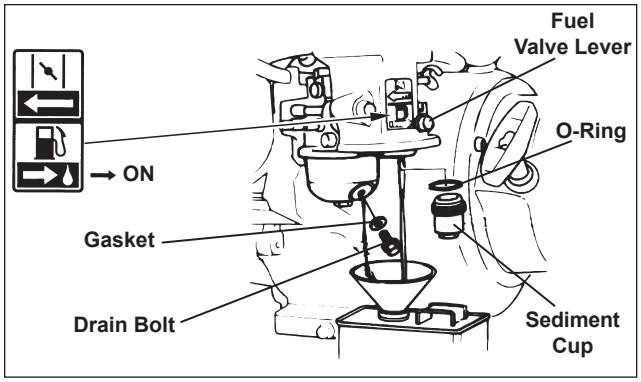

TROUBLESHOOTING
For all direct driven models

PROBLEM	POSSIBLE CAUSE	SOLUTION
LOW OPERATING PRESSURE	Insufficient water supply. Closed faucet. Inlet hose kinked	Use larger garden hose; clean inlet water screen. Open faucet.
	Clogged inlet hose strainer	Check plumbing system for leaks. Retape leaks with teflon tape.
	Faulty or mis-adjusted unloader valve	Adjust unloader for proper pressure. Install repair kit when needed. Call local distributor.
	Worn packing in pump	Call Dealer Customer Support.
	Machine has been stored in freezing temperatures	Thaw out machine completely, including hose, spray gun and wand.
	Slow engine RPM	Call local distributor.
FLUCTUATING PRESSURE	Worn or dirty pump valves	Call local distributor.
	Nozzle is obstructed	Blow out or remove debris with fine needle.
	Pump sucking air, inlet hose leaking	Check that all hoses and fittings are airtight. Turn off machine and trigger spray gun until a steady flow of water emerges through the nozzle.
	Insufficient water supply	Turn water on full force. Check garden hose for kinks, leaks or blockage.
PRESSURE LOW AFTER PERIOD OF NORMAL USE	Nozzle worn	Replace nozzle.
	Unloader valve worn	Replace unloader valve.
ENGINE WILL NOT START OR STOPS WHILE OPERATING	Low oil shutdown	Fill engine with oil.
	Out of gas	Fill fuel tank.
	Water in gasoline	Drain gas tank; fill with clean fuel.
ENGINE IS OVERLOADED	Nozzle partially blocked	Clean nozzle.
	Excessive pressure from high engine RPM	Adjust engine throttle to lower RPM.
WATER OR OIL LEAKING FROM BOTTOM OF PUMP	A small amount of leaking is normal	If excessive leaking occurs, call local distributor.
PRESENCE OF WATER IN PUMP OIL	Water sprayed at machine	Change oil. Direct spray away from machine.
	High humidity in air	Check and change oil twice as often.
	Piston packing worn. Oil seal worn.	Call local distributor.

TROUBLESHOOTING
For all direct driven models

PROBLEM	POSSIBLE CAUSE	SOLUTION
ENGINE OPERATES FOR 15 MINUTES THEN STOPS	Not enough gas or engine oil	Fill tank with gas. Check oil level.
	Vapor lock developed by heat of day	Keep gas tank full to avoid vapor locking.
	Obstruction in fuel filter	Clean or replace fuel filter.
ENGINE LACKS POWER	Dirty air filter	Replace air filter.
ENGINE FALTERS	Choke is opened too soon	Move choke to halfway position until engine runs smoothly.
WATER DRIPPING FROM UNDER PUMP	Piston packing worn	Call local distributor.
	O-Ring plunger retainer worn	Call local distributor.
	Cracked piston	Call local distributor.
OIL DRIPPING FROM UNDER PUMP	Oil seal worn or damaged	Call local distributor.
WATER LEAKING FROM PUMP PROTECTOR	Spray gun closed with machine running 5 minutes or longer	Open spray gun or turn off machine.
	Excess water supply pressure	Place a pressure regulator at end of 50' garden hose.
NO DETERGENT	Detergent suction tube not properly connected to machine	Check connection.
	Detergent is too thick	Dilute detergent. For best results, use manufacturers detergent.
	Detergent filter valve is at lowest setting	Set detergent filter valve to a higher setting.
	Filter on detergent suction tube is clogged	Run warm water through filter to remove debris.
	Damaged or clogged detergent suction tube	Remove obstruction or replace detergent suction tube.
	A high pressure nozzle is attached.	Replace with black detergent nozzle.
	Discharge nozzle is obstructed	Blow out or remove debris with fine needle.
GARDEN HOSE CONNECTION LEAKS	Loose fittings	Tighten fittings.
	Missing/worn rubber washer	Insert new washer.
SPRAY WAND LEAKS	Spray wand not properly attached	Slide the spray wand into the gun. Turn the wand collar clockwise onto the spray gun threads until tight.
	Broken o-ring	Call local distributor and order an o-ring.
PUMP IS NOISY	Pump is sucking air	Check that hoses and fittings are air tight. Turn off machine and purge pump by squeezing trigger gun until a steady flow of water emerges through nozzle.

PREVENTATIVE MAINTENANCE
For all direct driven models

This pressure washer was produced with the best available materials and quality craftsmanship. However, you as the owner have certain responsibilities for the correct care of the equipment. Attention to regular preventative maintenance procedures will assist in preserving the performance of your equipment. Contact your dealer for maintenance. Regular preventative maintenance will add many hours to the life of your pressure washer. Perform maintenance more often under severe conditions. Check pump oil and engine oil level before first use of your new pressure washer.

MAINTENANCE SCHEDULE		
Engine Oil	Inspect	Daily
	Change	First month or 20 hours. Every 100 hours or every 6 months after first month
	Filter	Every 50 hours
Air Cleaner/Filter	Inspect	Every 50 hours
	Clean	Monthly
Engine Fuel Filter		500 hours or 6 months
Spark Plug Maintenance		300 hours or annually
Clean Fuel Tank(s)		Annually
Replace Fuel Lines		Annually
Pump Oil (Non foaming) SAE 10W-40	Inspect	Oil level daily
	Change	After first 50 hours, then every 500 hours or annually
Replace High Pressure Nozzle		Every 6 months
Replace Quick Connects/O-Rings		Annually/As needed
Clean Water Screen/Filter		Weekly
Replace HP Hose		Annually (if there are any signs of wear)

NOTE: Read engine manual for any maintenance or service questions.

TROUBLESHOOTING
For all belt driven models

PROBLEM	POSSIBLE CAUSE	SOLUTION
LOW OPERATING PRESSURE	Faulty pressure gauge	Install new gauge.
	Insufficient water supply	Use larger supply hose; clean filter at water inlet.
	Old, worn or incorrect spray nozzle	Match nozzle number to machine and/or replace with new nozzle.
	Belt slippage	Tighten or replace; use correct belt.
	Plumbing or hose leak	Check plumbing system for leaks. Re-tape leaks with teflon tape.
	Faulty or mis-adjusted unloader valve	Adjust unloader for proper pressure. Install repair kit when needed.
	Worn packing in pump	Install new packing kit.
	Fouled or dirty inlet or discharge valves in pump	Clean inlet and discharge valves.
	Worn inlet or discharge valves	Replace with valve kit.
	Obstruction in spray nozzle	Remove obstruction.
	Leaking pressure control valve	Rebuild or replace as needed.
	Slow engine RPM	Set engine speed at proper specifications.
	Pump sucking air	Check water supply and possibility of air seepage.
	Valves sticking	Check and clean or replace if necessary.
	Unloader valve seat faulty	Check and replace if necessary.
FLUCTUATING PRESSURE	Worn or dirty pump valves	Call local distributor.
	Nozzle is obstructed	Blow out or remove debris with fine needle.
	Pump sucking air, inlet hose leaking	Check that all hoses and fittings are airtight. Turn off machine and trigger spray gun until a steady flow of water emerges through the nozzle.
	Insufficient water supply	Turn water on full force. Check garden hose for kinks, leaks or blockage.
PRESSURE LOW AFTER PERIOD OF NORMAL USE	Nozzle worn	Replace nozzle.
	Unloader valve worn	Replace unloader valve.
ENGINE WILL NOT START OR STOPS WHILE OPERATING	Low oil shutdown	Fill engine with oil.
	Out of gas	Fill fuel tank.
	Water in gasoline	Drain gas tank; fill with clean fuel.
ENGINE IS OVERLOADED	Nozzle partially blocked	Clean nozzle.
	Excessive pressure from high engine RPM	Adjust engine throttle to lower RPM.

TROUBLESHOOTING
For all belt driven models

PROBLEM	POSSIBLE CAUSE	SOLUTION
WATER OR OIL LEAKING FROM BOTTOM OF PUMP	A small amount of leaking is normal	If excessive leaking occurs, call local distributor.
PRESENCE OF WATER IN PUMP OIL	Water sprayed at machine	Change oil. Direct spray away from machine.
	High humidity in air	Check and change oil twice as often.
	Piston packing worn. Oil seal worn.	Call local distributor.
ENGINE OPERATES FOR 15 MINUTES THEN STOPS	Not enough gas or engine oil	Fill tank with gas. Check oil level.
	Vapor lock developed by heat of day	Keep gas tank full to avoid vapor locking.
	Obstruction in fuel filter	Clean or replace fuel filter.
ENGINE LACKS POWER	Dirty air filter	Replace air filter.
ENGINE FALTERS	Choke is opened too soon	Move choke to halfway position until engine runs smoothly.
WATER DRIPPING FROM UNDER PUMP	Piston packing worn	Call local distributor.
	O-Ring plunger retainer worn	Call local distributor.
	Cracked piston	Call local distributor.
OIL DRIPPING FROM UNDER PUMP	Oil seal worn or damaged	Call local distributor.
WATER LEAKING FROM PUMP PROTECTOR	Spray gun closed with machine running 5 minutes or longer	Open spray gun or turn off machine.
	Excess water supply pressure	Place a pressure regulator at end of 50' garden hose.
NO DETERGENT	Detergent suction tube not properly connected to machine	Check connection.
	Detergent is too thick	Dilute detergent. For best results, use manufacturers detergent.
	Detergent filter valve is at lowest setting	Set detergent filter valve to a higher setting.
	Filter on detergent suction tube is clogged	Run warm water through filter to remove debris.
	Damaged or clogged detergent suction tube	Remove obstruction or replace detergent suction tube.
	A high pressure nozzle is attached.	Replace with black detergent nozzle.
	Discharge nozzle is obstructed	Blow out or remove debris with fine needle.
GARDEN HOSE CONNECTION LEAKS	Loose fittings	Tighten fittings.
	Missing/worn rubber washer	Insert new washer.

TROUBLESHOOTING
For all belt driven models

PROBLEM	POSSIBLE CAUSE	SOLUTION
SPRAY WAND LEAKS	Spray wand not properly attached	Slide the spray wand into the gun. Turn the wand collar clockwise onto the spray gun threads until tight.
	Broken o-ring	Call local distributor and order an o-ring.
PUMP IS NOISY	Pump is sucking air	Check that hoses and fittings are air tight. Turn off machine and purge pump by squeezing trigger gun until a steady flow of water emerges through nozzle.

PREVENTATIVE MAINTENANCE
For all belt driven models

This pressure washer was produced with the best available materials and quality craftsmanship. However, you as the owner have certain responsibilities for the correct care of the equipment. Attention to regular preventative maintenance procedures will assist in preserving the performance of your equipment. Contact your dealer for maintenance. Regular preventative maintenance will add many hours to the life of your pressure washer. Perform maintenance more often under severe conditions. Check pump oil and engine oil level before first use of your new pressure washer.

MAINTENANCE SCHEDULE		
Engine Oil	Inspect	Daily
	Change	First month or 20 hours. Every 100 hours or every 6 months after first month
	Filter	Every 50 hours
Air Cleaner/Filter	Inspect	Daily
	Clean	Every 3 months or 50 hours
Engine Fuel Filter		500 hours or 6 months
Spark Plug Maintenance	Inspect	Every 6 months or 100 hours
	Change	Every year or 300 hours
Clean Fuel Tank(s)		Annually
Pump Oil (Non foaming) SAE 10W-40	Inspect	Oil level daily
	Change	After first 50 hours, then every 500 hours or annually (or 3 months)
Replace High Pressure Nozzle		Every 6 months
Replace Quick Connects		Annually
Clean Water Screen/Filter		Weekly
Replace HP Hose		Annually (if there are any signs of wear)
Belts*	Tighten	Every 6 months
	Inspect/Replace	Every 6 months

NOTE: When servicing belts, don't exceed 14 lb-ft on pump mounting screws.Failure to do so will cause pump thread damage.

NOTE: Read engine manual for any maintenance or service questions.

TECHNICAL SPECIFICATIONS

MODEL		HD 3.0/27		HD 3.5/35		HD 4.0/40		HD 5.0/30
SKU		1.107-503.0 1.107-507.0 1.107-523.0	1.107-513.0 1.107-517.0 1.107-527.0	1.107-504.0 1.107-514.0 1.107-524.0	1.107-508.0 1.107-518.0 1.107-528.0	1.107-505.0 1.107-506.0 1.107-515.0 1.107-516.0 1.107-525.0 1.107-526.0	1.107-509.0 1.107-510.0 1.107-519.0 1.107-520.0 1.107-529.0 1.107-530.0	1.107-511.0 1.107-512.0 1.107-521.0 1.107-522.0 1.107-531.0 1.107-532.0
WATER CONNECTION								
MAX INLET TEMPERATURE	(°F/°C)	105 (40)		105 (40)		105 (40)		105 (40)
MAX INLET FLOW	(GPM / l/ min)	1.6(0.5)		1.6(0.5)		1.5(0.4)		1.5(0.4)
MAX INLET PRESSURE	(PSI/MPa)	145 (1)		145 (1)		145 (1)		145 (1)
PERFORMANCE DATA								
MAX FLOW RATE	(GPM / l/ min)	3.0 (11.3)		3.5 (13.2)		4.0 (15.1)		5.0 (18.9)
OPERATING PRESSURE	(PSI/MPa)	2700 (18.6)		3500 (24.1)		4000 (24.1)		3000 (20.7)
MAX PRESSURE	(PSI/MPa)	3400		4200		4700		3700
MAX OPERATING TEMP	(°F/°C)	145° (62.7°)		145° (62.7°)		145° (62.7°)		145° (62.7°)
DETERGENT SUCK IN	%	20		20		20		20
MAX RECOIL FORCE OF TRIGGER GUN	N	36.5		48.5		59.3		64.2
NOZZLE SIZE	-	035	037	035		040		060
FUEL TYPE								
FUEL TYPE	-	Unleaded gasoline		Unleaded gasoline		Unleaded gasoline		Unleaded gasoline
FUEL SPECIFICATION	Octane	≥86		≥86		≥86		≥86
FUEL TANK SIZE	GAL (L)	0.8 (3.1)		1.4 (5.3)		6.1 (1.6)		6.1 (1.6)
DIMENSIONS AND WEIGHTS								
TRANSMISION	-	DIRECT DRIVEN	BELT DRIVEN	DIRECT DRIVEN	BELT DRIVEN	DIRECT DRIVEN	BELT DRIVEN	BELT DRIVEN
LENGTH X WIDTH X HEIGHT	in (mm)	44.250 (1123.95) x 24.250 (615.95) x 26.700 (678.18)	44.250 (1123.95) x 25.375 (644.53) x 26.700 (678.18)	44.250 (1123.95) x 24.250 (615.95) x 26.700 (678.18)	44.250 (1123.95) x 25.375 (644.53) x 26.500 (698.50)	44.250 (1123.95) x 24.250 (615.95) x 26.700 (678.18)	44.250 (1123.95) x 25.375 (644.53) x 27.500 (698.50)	44.250 (1123.95) x 25.375 (644.53) x 27.500 (698.50)
SHIPPING WEIGHT	lbs (kg)	145.319 (65.916)	180.432 (81.843)	166.332 (75.447)	213.200 (96.706)	207.628 (94.178)	250.528 (113.638)	250.528 (113.638)
MACHINE WEIGHT	lbs (kg)	91.319 (41.422)	126.432 (57.349)	112.332 (50.953)	159.200 (72.212)	153.628 (69.684)	196.528 (89.144)	196.528 (89.144)

Karcher

Hotsy

Landa

KÄRCHER

Pressure Washer Warranty Policy NQA

Karcher North America 6398 N Kärcher Way, Aurora, CO 80019

Form #9.808-441.0 • Revised 01/25 • Printed in U.S.A. or Mexico