RVC 3

KÄRCHER

Quickstart

A

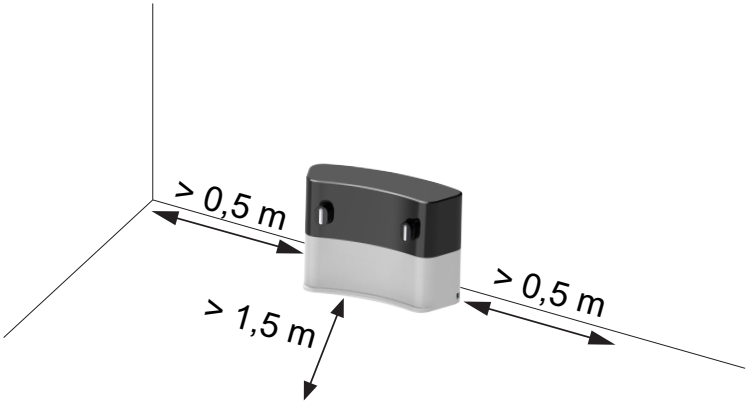

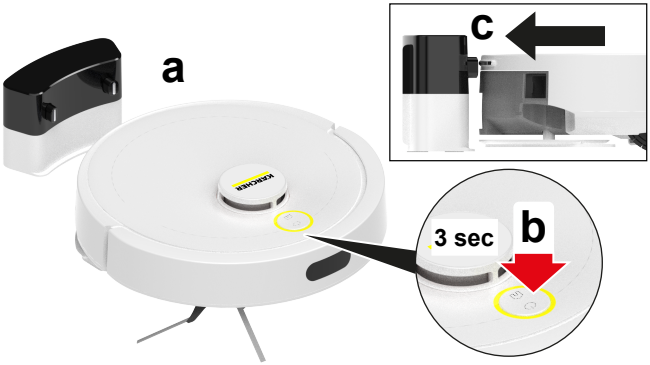

B

1.

IOS App Store

Android

2.

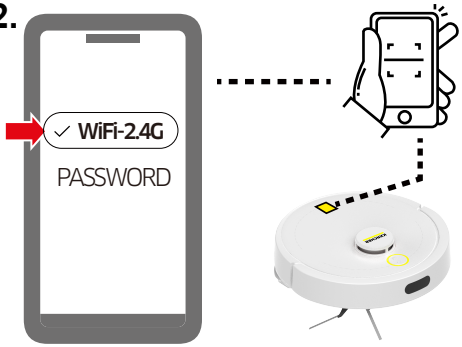

3.

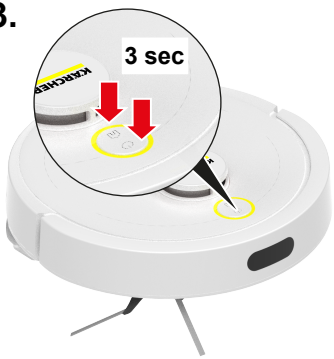

4.

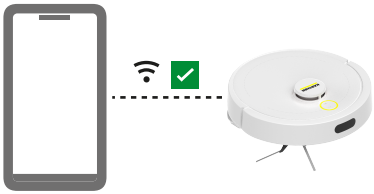

ON

C

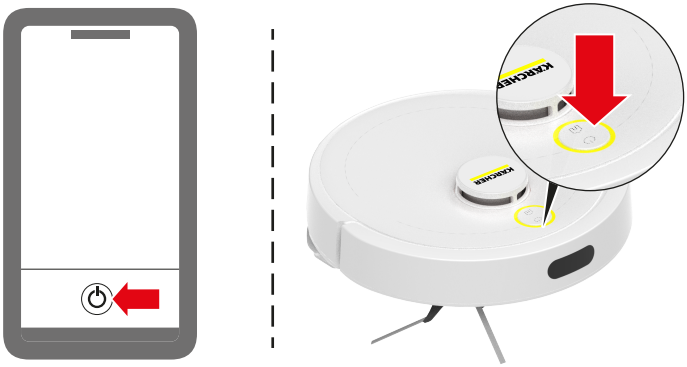

D

RVC 3